MEDENUS

Gas Pressure Regulation

Gas pressure regulator RS 254 / RS 255

Operating and Maintenance Instructions

EN

Construction RS gas pressure regulator

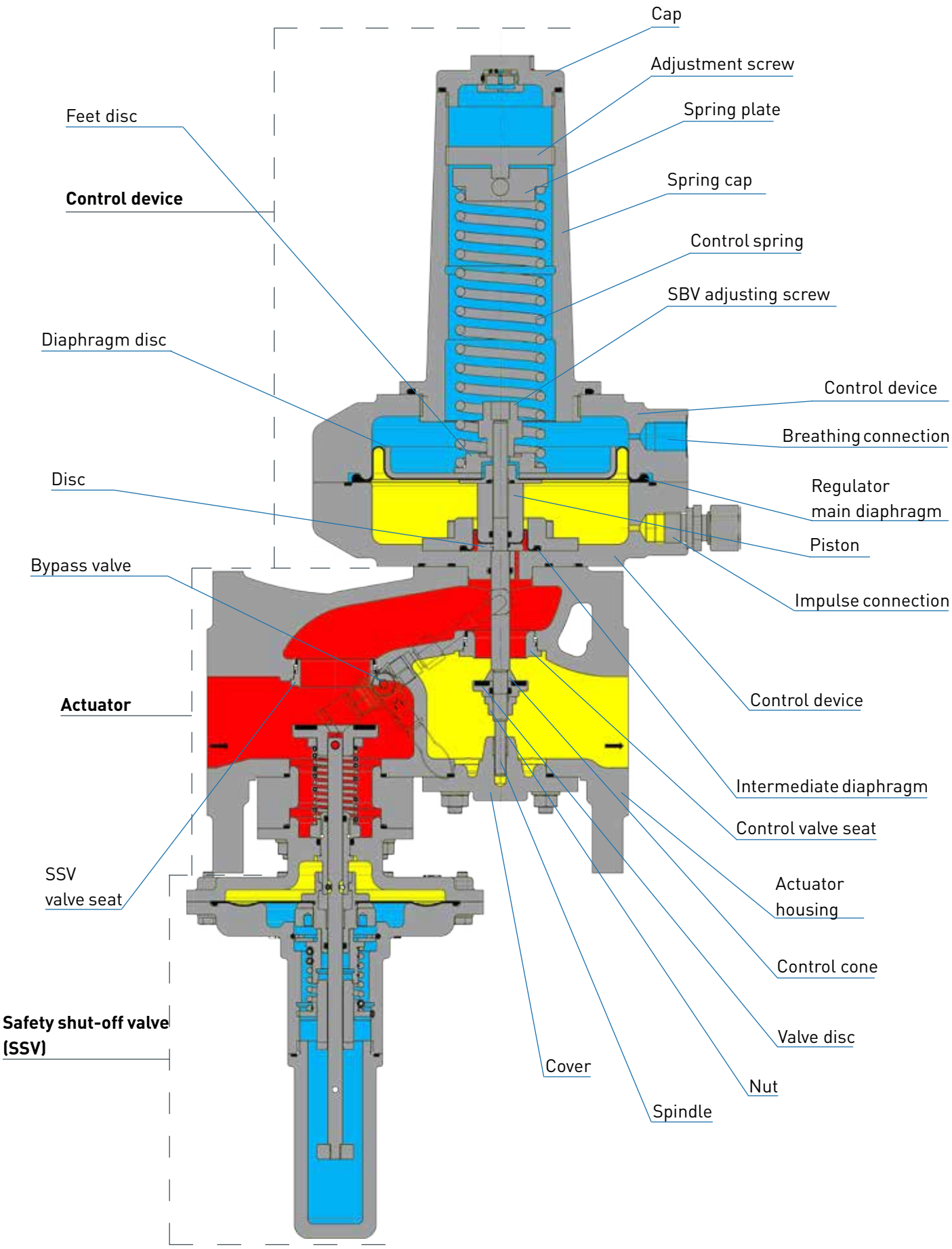

shown RS 254 DN050

Table of contents

1 General Information

The personnel entrusted with installation, operation or maintenance of the gas pressure regulator must have completely read and understood beforehand the following documents:

- **Gas Pressure Regulator RS 254 / RS 255 Product Information**
  The product information contains technical data, dimensions and a description of the design and the mode of operation.

- **Gas Pressure Regulator RS 254 / RS 255 Operating and Maintenance Instructions**
  This document allows safe and efficient handling of the device and contains information on assembly, commissioning, maintenance, troubleshooting and repair according to regulations.
  It is an integral part of the scope of delivery of the device, must be kept in close proximity of the device and must be readily accessible to personnel at any time.
  The basic requirement of safe operation is compliance with all safety instructions and guidelines specified in these instructions. Accordingly, the information and instructions must be observed when working on the device or on the gas line. In addition, the local occupational safety regulations and the general safety regulations for the application range of the device shall apply.
  The figures in these instructions are provided for basic understanding and may differ from the actual design.
  The contents in these instructions are protected by copyright. They may be used as part of operating the device. Any other use and / or reproduction is not permitted without prior authorization by the MEDENUS Gas-Druckregeltechnik GmbH.

1.1 Warranty and Liability

Claims under warranty or liability for personal injury and material damage are generally void,
if one or several of the following **conditions are not observed**:

- Work on the device during the warranty period may only be performed in consultation with the manufacturer
- Designated use of the device in accordance with the established conditions of use
- Proper installation, commissioning, operation and maintenance of the device
- Operation of the device with properly installed and functioning safety devices only
- Operating and maintenance instructions of the device or of the system
- Observance of the maintenance instructions
- Properly performed repairs
- Supply lines without defects
- The use of original MEDENUS© spare parts and lubricants listed in these instructions or
- Force majeure

It is generally prohibited

- to perform constructive modifications on the device
- to keep using the device despite the detection of a defect

1.2 Symbols, Notes

The instructions contain safety instructions marked with symbols to indicate possible consequences in case of non-observance:

This combination of symbol and signal word indicates a potentially hazardous situation which may result in light injuries, damage to the device, the breakdown of the system, and material or environmental damage if not avoided.

NOTICE

This combination of symbol and signal word indicates an imminent hazardous situation, resulting in death or serious injuries if not avoided.

DANGER

This signal word highlights useful tips, recommendations and information for efficient and trouble-free operation.

Note

1.3 Terms, Abbreviations

Terms and abbreviations are explained below:

ATC	Acceptance test certificate	p_d	Outlet pressure	MOP	Maximum operating pressure in a system
DN	Nominal width	p_{ds}	Setpoint of the outlet pressure		
GPR	Gas pressure regulator				
HDS	High-pressure screw spindle	SSV	Safety shut-off valve		
M_A	Screw tightening torque	SRV	Safety relief valve		

2 Application, Characteristics

2.1 Application

Gas pressure regulator (GDR), indirect-acting (operating with auxiliary power), for systems acc. to DVGW - work sheet G 491 (A) and G 600 (A) (TRGI)
Very suitable for dynamic control systems (eg gas fireplaces, natural gas supply systems, burner circuits, gas engine operation)
Can be used as an equipment component on gas consumption facilities as defined in EC Directive EU/2016/426 (GAR)
Can be used for the gases defined in DVGW - work sheet G 260 / G 262 and neutral non-aggressive gases.
(other gases on request)

2.2 Characteristics

- Integral pressure-tight model (IS)
- Gas pressure regulator with or without integrated SSV
- Compact and maintenance-friendly modular design
- SSV functional class, optionally A or B to DIN EN 14382
- Open-air model*

2.3 Type of model (option)

- Oxygen version
- With built-in noise reduction
- With SSV manual release
- With SSV electromagnetic remote release when power is applied or in case of power failure
- With electric position indicator SSV ‚Closed' via inductive proximity initiator or via Reed contact
- With BV breather valve or RSS switching valve (for SSV release in case of diaphragm breakage)
- with throttle valve (RSD) for the impulse line
- Coating with epoxy resin in RAL colours

3 Reasonably be foreseeable wrong use

- The controllers must not be used for controlling liquids.
- The controllers must not be used in temperature ranges of less than -20 ° C or more than 60 ° C
- The regulators must not be used for pressure ranges higher than the pressure „PS" on the rating plate is called used.
- The regulators may only be used for the application specified in section (2.1), in this operating manual Gases are used.
  Other gases, such as oxygen or hydrogen, must be explicitly mentioned on the nameplate.
  Please inform the manufacturer before use.
- The controllers must not be used without an upstream HTB fuse in high-temperature areas become

*) Categories C1 to C5-I are guaranteed without additional coatings.
For category C5-M, an epoxy resin coating is recommended.

4 Safety Instructions

National accident prevention regulations and the system operator's safety regulations are not superseded by these operating and maintenance instructions and must be taken into consideration with priority (in Germany, see, among others, DVGW Code of Practice G 600, G 459/II, G 491 and G 495).

When performing work on the device, the current general and specific safety regulations must be observed.
The application limits of the device with respect to the medium, operating pressure and operating temperature can be found on the type plate affixed to the device or on the acceptance test certificate.
Using the device under different operating conditions must be agreed upon in consultation with
MEDENUS Gas-Druckregeltechnik GmbH.

The mechanical components of the device do not have any potential ignition sources of their own nor any hot surfaces and are thus not within the scope of 2014/34/EU (ATEX). The electronic accessories used comply with the ATEX requirements.

4.1 Hazards of Handling the Device

MEDENUS© devices conform with current standards and directives, the recognized technical rules
and the recognized safety rules.

However, improper use can result in hazards to the user or to third parties. This can also result in damage to the device or to the system.

This is why the device may only be used:

- in accordance with its designated use
- in perfect condition
- while observing the notes given in these operating and maintenance instructions, and inspection and maintenance regulations, which apply to the functioning and safety of the overall system.

Malfunctions or faults must be eliminated immediately.

4.2 Personnel Requirements

The device may only be mounted by qualified personnel.
Only authorised personnel in possession of the required qualification is allowed to perform settings or repairs on the device.

4.3 Country-Specific Requirements

The rules and regulations applicable at the place of use with respect to

- gas lines, installation of the gas system,
- gas supply,
- work on the gas system,
- accident prevention must be observed and complied with.

4.4 Handover of the Operating and Maintenance Instructions

The supplier of the system shall hand over these operating and maintenance instructions to the operator of the system no later than during commissioning and training
of the operating personnel with the reminder to carefully store these instructions.

4.5 Safety in Operation

The device may only be used when all protective devices on the device or in the system are fully functional.
The device must be inspected by a representative of the manufacturer or by a qualified person for externally visible damage and for proper functioning at least once a year.
A more frequent inspection may become necessary, depending on the system conditions.

4.6 What To Do in Case of Danger

Information on what is to be done in case of danger and in case of accidents can be found in the respective operator's or specialist companies' work instructions.

5 Responsibility of the Operator

Operator

An operator is a person who operates the device himself for commercial or economic purposes or hands it over to a third party for use / application and is legally responsible for the safety of the user, personnel or third parties.

Operator's obligations

The device is used in the industrial sector. Accordingly, the operator of the device is subject to the legal obligations concerning occupational safety. In addition to the safety instructions contained in these instructions, the established maintenance intervals must be observed, taking into account the respective national standard (alarm and hazard prevention plan).

In particular, the following applies:

- The operator is obliged to perform work on MEDENUS© devices during the warranty period only after consultation with the manufacturer. Otherwise the claims under warranty will become void.
- The operator must obtain information on the current occupational safety regulations and determine additional hazards resulting from the special work conditions at the place of use of the device in a risk assessment. The operator must implement them in the form of operating manuals for operating the device.
- During the entire time of use of the device, the operator must check whether the operating manuals drawn up by him conform to the current state of the regulations and, if necessary, adapt them.
- The operator must clearly regulate and define the responsibilities for installation, operation, troubleshooting, maintenance and cleaning.
- The operator must ensure that all persons handling the device have read and understood these instructions. In addition to that, he must train the personnel at regular intervals and inform it about the dangers.
- The operator must make available to the personnel the required protective equipment and oblige them to wear the required protective equipment.
- Moreover, the operator is responsible for the device always being in technically perfect condition.

Therefore, the following applies:

- The operator must make sure that the maintenance intervals described in these instructions are observed.
- The operator must have all safety devices checked regularly for functioning and completeness.

6 Transport, Storage and Packaging

6.1 Transport

Note

The device is delivered with flange protective caps. They must be removed prior to installation.
Make sure that the device is transported horizontally using suitable lifting gear. The device must be handled carefully and secured against impact and shock.
In case of transport damage, we will require the following information from the type plate affixed to the device:

- Type of device
- Device model
- Year of construction / fabrication number

6.2 Storage

Equipment and spare parts must be stored under the following conditions:

- Do not store outdoors.
- Store in a dry and dust-free location.
- Store on a flat surface.
- Do not expose to aggressive media.
- Do not expose to ozone or ionising radiation.
- Do not store adjacent to direct heat sources.
- Avoid mechanical vibrations.
- Storage temperature: 0 to 25°C.
- Relative humidity: < 55 %.

Spare parts:

- Components susceptible to corrosion must be provided with a suitable preservative.
- Do not store O-rings and seals for more than 7 years even if stored properly.
- Spare parts must be stored in their original packaging until use.

Storage period for devices:

- Storage of the device for up to one year:
  Store the gas pressure regulator in its original packaging and original condition at the time of supply. All protective caps of the device must remain mounted.
- Storage of the device for more than 1 year (e.g. as a spare device):
  Store the device in its original packaging and original condition at the time of supply and check it for damage once a year. Check the housing surface for dirt, damage and corrosion. If necessary, clean all external parts. After 7 years, all O-rings and seals must be replaced.

6.3 Packaging

- The individual packaged items have been packaged in view of the transport conditions to be expected.
- The symbols on the packaging must be observed during transport and storage.
- Only environmentally-friendly materials have been used for packaging.
- The packaging is designed for protecting the individual components from transport damage, corrosion and other damage until mounting. This is why the packaging must not be destroyed and only be removed just prior to mounting.

7 Mounting and Commissioning

7.1 Safety Instructions and Preparation

Prior to starting work on pressurised components:

DANGER

- Close all connections to the gas line.
- Depressurise all pressurised components. Also discharge residual energies.
- Defective components that are subject to pressure in operation must be replaced immediately by a suitable qualified person.

Note

Prior to starting work, ensure sufficient clearance for mounting.
Before installing the device, check whether the performance data (type plate) and the scope of delivery coincide with the order or the system data, i.e., make sure that the provided devices are suitable for their intended purpose. In particular, the inlet pressure of the system must be lower than the maximum allowable pressure of the device.

Note

A direct contact of gas valves and fittings, i.e., the control system, with hardening masonry, concrete walls or floors is not allowed. Provide suitable supports, working materials and protective equipment. Take into account the minimum clearances for maintenance as stated in the product information.
Before installing the device in the pipeline, check whether a shut-off device that interrupts the gas flow supply to the device has been mounted upstream and downstream of the device to be installed.

DANGER

Prior to commissioning, make sure that all installation work has been carried out and completed in accordance with the data and information given in these instructions and that no unauthorised persons stay in the danger zone.

7.2 Mounting

- Remove packaging and protection from the connection flange surfaces.
- Install the device without twisting the pipeline. Tighten screws crosswise.
  Make sure to observe the direction of flow, i.e. the arrow on the housing must point in the direction of flow.

Note

- In all installation positions other than horizontal,
  MEDENUS Gas-Druckregeltechnik GmbH must be consulted.

Note

- The tightening torques of the flange connections and additional information is available in the DVGW GAS information issue no. 19 (Flanged Connections in Gas Installations).

Note

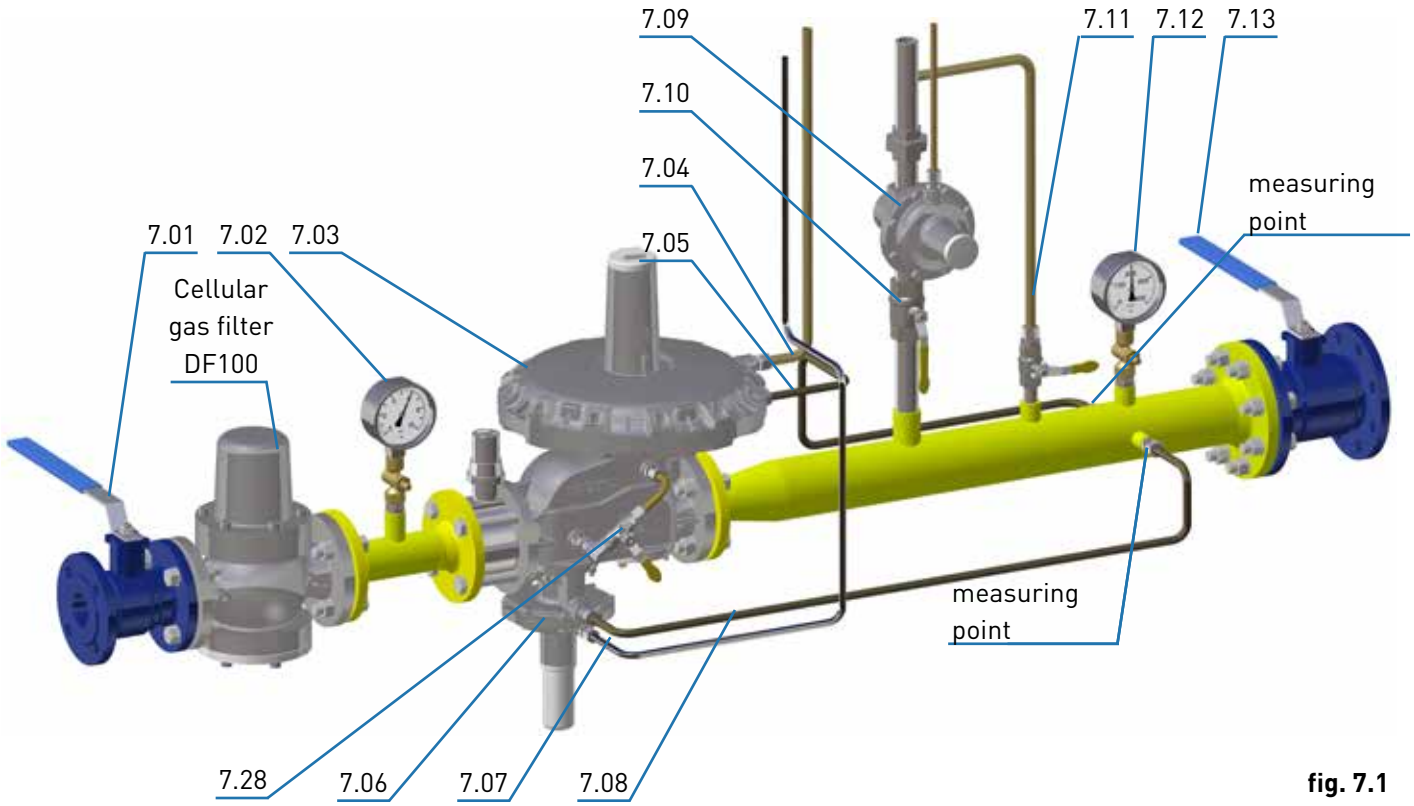

fig. 7.1

- A separate installation of the SSV breather line (item 5.07) is recommended.
- All breather lines (items 7.04 / 7.07) must be vented to the outside atmosphere.
- Breather lines (items 7.04 / 7.07) may not be required
  if breather valves or safety diaphragms are being used.
- The measuring lines (items 7.05 / 7.08) must be connected in a pipeline section with a steady flow. There must be no installations that cause flow interference such as shutters, expansions, manifolds, junctions, isolation valves etc. directly upstream and downstream of the measurement point.
- The maximum flow rate at the measuring point must not exceed 25 m/s, depending on the system conditions.
- In certain system circuits, such as gas control systems for gas motors and in gas burners, higher flow rates than 25 m/s are also possible. Please contact us.
- The measuring line must be connected to the pipeline separately, laterally or at the top for each device (1 gas pressure regulator (item 7.03); 1 integrated SSV (item 7.06).
- The SSV measuring line (Pos. 7.08) must always be connected to the measuring point in front of the first outlet-side shut-off valve (item 7.13).

7.3 Leakage Test (Test for External Leakage)

The devices are subjected to a strength and leakage test ex works at MEDENUS Gas-Druckregeltechnik GmbH.

The leakage test in the fully assembled system must be performed prior to commissioning and following maintenance work. For the external leakage test in the fully assembled system, the following applies:

For Germany:
According to DVGW Code of Practice G 491, the fully assembled system must be subjected to a leakage test with air or an inert gas at the installation site, using 1.1 times the maximum operating pressure of the system (MOP).
An exception is the room between the actuator installed in the gas pressure regulator and the first shut-off valve on the outlet side. This room must be checked using the a test pressure corresponding to the maximum permissible pressure in the system in case of a malfunction (1.1 MOP_d). In this test, all detachable connections must be checked using a foaming agent.

Note

In direct-acting devices (without power supply), the outlet pressure acting on the actuator (limited by the SSV) should not be more than 0.5 bar above the set setpoint. This should be taken into account when specifying the response pressure of the upstream SSVs.
Recommended upper response pressures:

- $P_d \leq 100$ mbar $P_{dso} = P_d + 50$ mbar
- $P_d > 100 - 200$ mbar $P_{dso} = P_d + 100$ mbar
- $P_d > 200 - 1000$ mbar $P_{dso} = P_d \times 1.5$
- $P_d > 1000$ mbar $P_{dso} = P_d + 500$ mbar

For other countries:
The relevant national and international standards shall apply.

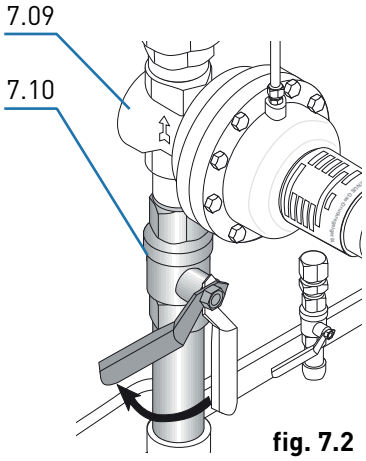

fig. 7.2

Procedure

- Close the ball valves upstream of the valves and fittings (item 7.01).
- Close the downstream shut-off devices (item 7.13) (ball valves, solenoid or pneumatic valve).
- Depressurise the system (item 7.11).
- If there is a SRV (safety relief valve) in the controlled section and the test pressure is higher than the relief pressure of the SRV (item 7.09), the line upstream of the SRV (item 7.10) must be closed.
- Raise the test pressure always slowly and steadily.

  While doing so, you must ensure:
  Pressure in outlet chamber (item 7.12) ≤ Pressure in inlet chamber (item 7.02)
  Pressure build-up always from the inlet side (inlet chamber)
  Pressure reduction always from the outlet side (outlet chamber)

- After leakage test:
  Open the ball valve in the SRV line (item 7.10) again.

Note

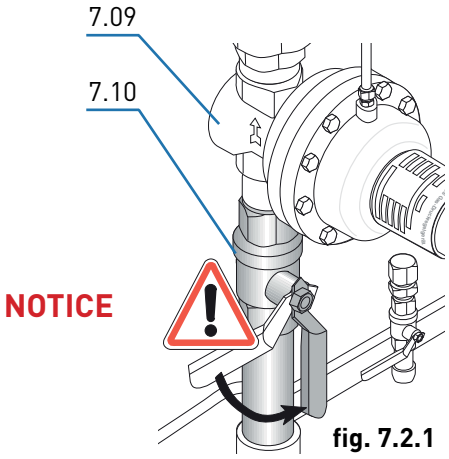

fig. 7.2.1

7.4 Initial Commissioning / Recommissioning

Initial commissioning of the system components shall be carried out by the operator. For commissioning, please refer to the documents listed under item 1 "General Information" and the system operator's work instruction.
The devices delivered by MEDENUS Gas-Druckregeltechnik GmbH are factory-set to the operating data specified by the customer. This data is listed on the Acceptance Test Certificate (ATC)* and the type plate.

Note Prior to commissioning of the system, a functional test must be performed on the gas pressure regulator (GPR), if applicable, and the safety shut-off and safety relief valves.

Procedure (fig. 7.1)

- Close the ball valves upstream of the valves and fittings (item 7.01).
- Close the downstream shut-off devices (item 7.13) (ball valves, solenoid or pneumatic valve).
- Depressurise the system (item 7.11).
- Close venting ball valve (item 7.11).
- Slowly open ball valve upstream of the valves and fittings (item 7.01).

Note If the inlet shut-off device is equipped with a bypass, the latter must be slowly opened for pressure compensation as step 1. This is followed by slowly opening the inlet shut-off valve. The same is true of the outlet shut-off valve.

- Check the inner leakage of the SSV (item 7.06) by reading the pressure gauge installed downstream of the GPR (item 7.12).
- Unscrew the sealing cap (item 7.15) of the safety shut-off valve (SSV).
- Perform pressure compensation via the SSV by pulling at the pull knob (item 7.14) and allowing the SSV to engage. In GPR with bypass ball valve (item 7.28), open the ball valve (item 7.28) while pulling the pull knob (item 7.14) until the SSV engages to perform pressure compensation.
- A closing pressure corresponding to the set value is established on the GPR.

Note An SSV with underpressure shut-off can only be engaged if the pressure at the measuring point exceeds the set value by at least the re-engagement differential.

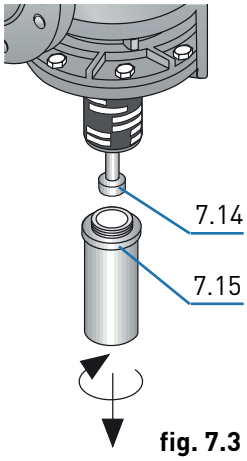

fig. 7.3

- Testing the response pressure of the SSV by slowly increasing or decreasing the output pressure to response pressure.
- It may be necessary to correct the setpoint values of the response pressures. This is done by turning the SSV setpoint setting screws (items 7.17 / 7.19) to the right (pressure increase) or left (pressure decrease) in order to increase/ decrease the setpoint value.

Note The inner setting screw (item 7.17) sets the underpressure shut-off level (lower trigger level) and the outer setting screw (item 7.19) sets the upper trigger level.

- Perform pressure compensation via the SSV again by pulling the pull knob (item 7.14) and allowing the SSV to engage.

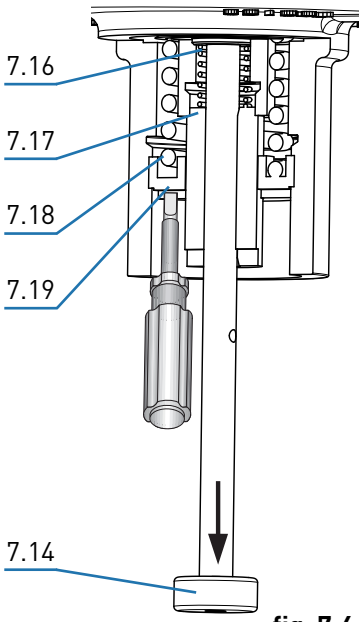

fig. 7.4

*) Acceptance Test Certificate (ATC) available optionally

- For the functional test of the GPR, let gas flow via the discharge line (venting) (item 7.11) to the outside atmosphere and read the set regulating pressure on the outlet pressure gauge (item 7.12).
- It may be necessary to correct the setpoint of the outlet pressure once again. This is done by turning the GPR setpoint setting screw (item 7.22) to the right or left, in order to increase and decrease the setpoint, respectively, after removal of the GPR sealing cap (item 7.21).
- After closing the discharge line (item 7.11), a constant closing pressure within the closing pressure class can be read on the outlet pressure gauge (item 7.12).
- Slowly open the shut-off valve (item 7.13), close the discharge line (item 7.11) and read the set regulating pressure on the outlet pressure gauge (item 7.12).
- It may be necessary to correct the setpoint of the outlet pressure once again.
- Screw on the sealing cap (item 7.15) of the safety shut-off valve (SSV) again.
- Screw on the GPR sealing cap (item 7.21) again.

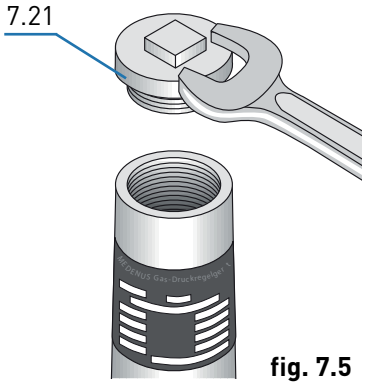

fig. 7.5

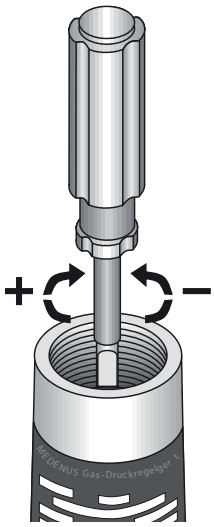

fig. 7.6

Changing the control range

Switching to the control range of a different setpoint spring can be done for the SSV as well as for the GPR while the device is pressurised.

Gas pressure regulator

- Take off the sealing cap (item 7.21) and unscrew the setting screw (item 7.22).
- Pull out the spring plate (item 7.24) with ball (item 7.23) and spring (item 7.25) and replace the spring with one that fits.
- Screw in the spring plate (item 7.24), the ball (item 7.23) and the setting screw (item 7.22) again.
- Set the desired setpoint and screw on the sealing cap (item 7.21) again.

Safety shut-off valve

- Remove the sealing cap (item 7.15) and screw off the pull button (item 7.14) for changing the spring of the underpressure shut-off device (item 7.16).
- Screw off the corresponding setting screw (items 7.17 / 7.19) for the upper or lower trigger level.
- Pull out the spring (item 7.16 / 7.18) and replace it with one that fits.
- Screw in the setting screw (item 7.17 / 7.19) again and fasten the pull button (item 7.14) on the spindle again.
- Set the desired setpoint and screw on the sealing cap (item 7.15).

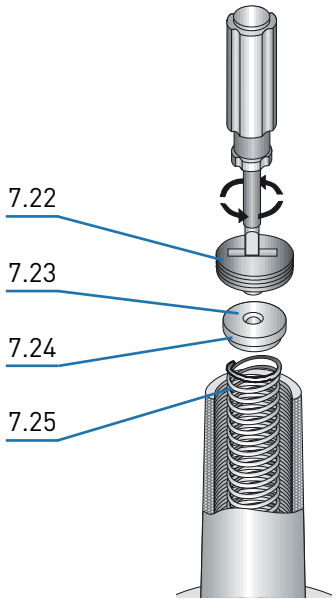

fig. 7.7

The SSV closes if the overpressure setpoint spring (upper trigger level) is removed from a pressurised system.

Note

7.5 Control unit setpoint spring table

Specific command range W_{ds} [mbar]				Spring data	
RE 205	RE 275	RE 320	RE 390	Spring no.	Colour [RAL]
36 - 39	23 - 25	10 - 12	8 - 10	FA 01	blank
38 - 45	24 - 28	11 - 13	9 - 12	FA 02	9006
44 - 52	27 - 31	14 - 18	11 - 13	FA 03	5015
51 - 64	30 - 37	17 - 22	12 - 15	FA 04	4002
62 - 81	35 - 46	21 - 29	14 - 19	FA 05	7037
78 - 107	43 - 59	28 - 39	18 - 24	FA 06	9005
103 - 147	55 - 80	38 - 54	23 - 32	FA 07	3020
140 - 205	73 - 110	53 - 77	31 - 45	FA 08	9010
195 - 295	100 - 156	76 - 111	42 - 64	FA 09	7016
280 - 430	141 - 225	110 - 166	59 - 94	FA 10	6010
419 - 653	208 - 339	165 - 250	88 - 142	FA 11	2002
595 - 935	293 - 484	239 - 361	124 - 203	FA 12*	7035
819 - 1408	436 - 726	360 - 544	185 - 305	FA 13*	5010
1245 - 1976	607 - 1017	506 - 765	258 - 428	FA 14*	1028
1212 - 2553	699 - 1333	535 - 978	297 - 568	FA 15*	6018
1330 - 3012	785 - 1580	602 - 1157	333 - 673	FA 16*	3020

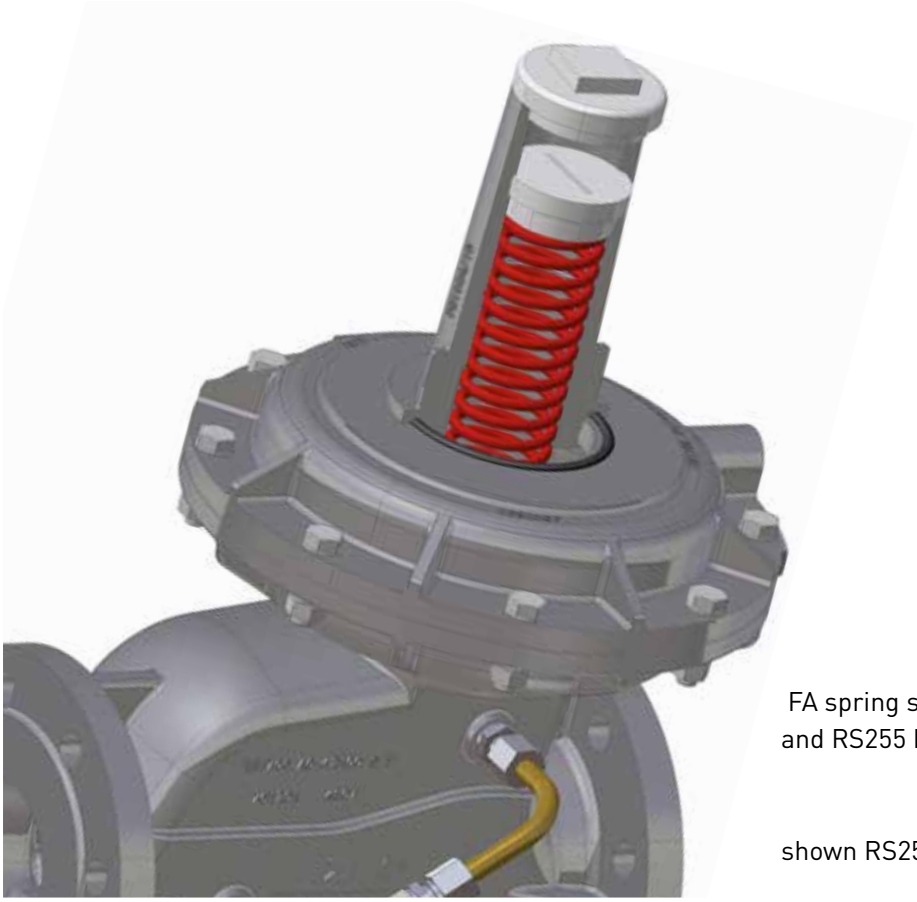

FA spring series for RS254 DN 025 - DN 100 and RS255 DN 050

shown RS254 DN 080 with FA11

*) with high-pressure screw spindle (HDS shown on p.25)

Specific command range W_{ds} [mbar]			Spring data	
RE 275-2	RE 385-2	RE 485	Spring no.	Colour [RAL]
59 - 69	31 - 35	19 - 22	FB 701	6018
68 - 83	34 - 41	21 - 25	FB 702	9006
80 - 105	40 - 51	24 - 31	FB 703	5015
96 - 127	50 -61	28 - 36	FB 704	4002
112 - 156	60 - 77	33 - 44	FB 705	7037
146 - 207	76 - 100	41 - 56	FB 706	9005
184 - 266	98 - 127	51 - 71	FB 707	3020
238 - 358	125 - 167	65 - 94	FB 708	9010
302 - 450	165 - 215	82 - 118	FB 709	7016
397 - 596	212 - 285	105 - 155	FB 710	6010
542 - 814	280 - 390	140 - 209	FB 711	2002
742 - 1078	385 - 520	188 - 275	FB 712	7035
977 - 1442	515 - 671	246 - 369	FB 713*	5010
1245 - 1878	661 - 873	311 - 479	FB 714*	1028
1547 - 2469	712 - 1186	393 - 618	FB 715*	6018

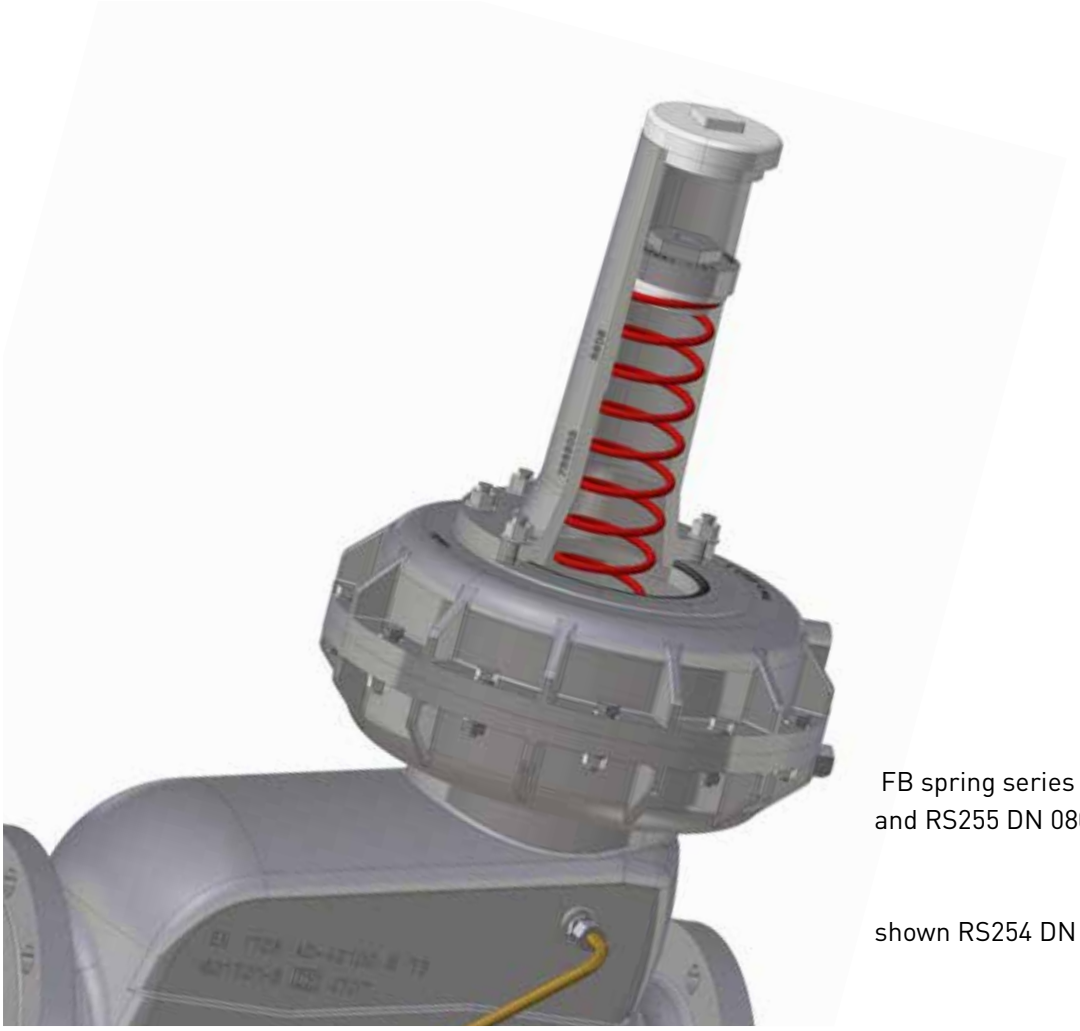

FB spring series for RS254 DN 150 - DN 200 and RS255 DN 080 - DN 100

shown RS254 DN 200 with FB707

7.6 Setpoint spring table - SSV

		MD small ball lock up to $W_{ds\,o}$ 300mbar				**MD-R** small ball lock up to $W_{ds\,o}$ 3500mbar				**HD** small ball lock up to $W_{ds\,o}$ 14000mbar			
		RS 254: DN 25 - 100 / RS 255: DN 50 - 80											
Spring data		lower response pressure		upper response pressure		lower response pressure		upper response pressure		lower response pressure		upper response pressure	
Feder Nr.	Colour [RAL]	$W_{ds\,u}$ [mbar]	Δp_{wu} [mbar]	w_{dso} [mbar]	Δp_{wo} [mbar]	$W_{ds\,u}$ [mbar]	Δp_{wu} [mbar]	w_{dso} [mbar]	Δp_{wo} [mbar]	$W_{ds\,u}$ [mbar]	Δp_{wu} [mbar]	w_{dso} [mbar]	Δp_{wo} [mbar]
FE 900	1028					0 - 10	50			0 - 38	500		
FE 901 VA	2002					6 - 30*	50			20 - 120*	500		
FE 902 VA	6010	0 - 12*	20			24 - 74	50			120 - 310*	500		
FE 903	5015	4 - 14	20			36 - 78	50			160 - 316	500		
FE 904 VA	9005	8 - 18	20			58 - 110	50			200 - 400	500		
FE 905 VA	9010	18 - 42	20			110 - 160	50			416 - 650	500		
FE 906	4002	48 - 70	20			162 - 250	50			560 - 940	500		
FD 910	1028			35 - 45	20			100 - 135	50			0 - 38	300
FD 911	2002			45 - 80	20			130 - 250	50			20 - 120	300
FD 912	6010			70 - 120	20			220 - 360	50			120 - 310	300
FD 913	5015			100 - 170	20			320 - 510	50			160 - 316	300
FD 914	9005			140 - 230	20			440 - 700	50			200 - 400	300
FD 915	9010			210 - 370	20			630 - 1130	50			416 - 650	300
FD 916	3020			330 - 570	20			1060 - 1750	50			560 - 940	300
FD 917	5010			460 - 830	20			1420 - 2520	50			4700 - 7300	300
FD 918	9006			650 - 1080	20			1850 - 3200	50			7300 - 12100	300
FD 919	4002			980 - 1500	20			2800 - 4600	50			11700 - 14000	300

		MD big ball lock up to $W_{ds\,o}$ 300mbar				MD-R big ball lock up to $W_{ds\,o}$ 3500mbar				HD big ball lock up to $W_{ds\,o}$ 14000mbar			
		RS 254: DN 150 - 200 / RS 255: DN 100											
Spring data		lower response pressure		upper response pressure		lower response pressure		upper response pressure		lower response pressure		upper response pressure	
Feder Nr.	Colour [RAL]	$W_{ds\,u}$ [mbar]	Δp_{wu} [mbar]	w_{dso} [mbar]	Δp_{wo} [mbar]	$W_{ds\,u}$ [mbar]	Δp_{wu} [mbar]	w_{dso} [mbar]	Δp_{wo} [mbar]	$W_{ds\,u}$ [mbar]	Δp_{wu} [mbar]	w_{dso} [mbar]	Δp_{wo} [mbar]
FM 400	1028	10 - 40*	20			10 - 180*	50			0 - 250	500		
FM 402	6010	35 - 115	20			155 - 380	50			150 - 1000*	500		
FM 404	9005	60 - 245	20			200 - 950	50			650 - 2050	500		
FL 412	6010			40 - 180	20			145 - 670	50			380 - 1400	300
FL 413	5015			70 - 340	20			270 - 1230	50			800 - 2800	300
FL 415	9010							1200 - 4500	50			3200 - 5500	300
FL 417	4010											4500 - 14000	300

Determining the upper response pressure

Outlet pressure P_d (mbar)	Upper response pressure W_{dso} ***
≤200	P_d +100 mbar
>200 - ≤800	P_d x 1.5
>800 - ≤1600	P_d x 1.3
>1600	P_d +500 mbar

*) if possible not greater than 450 mbar

**) If the control device is set up for simultaneous monitoring of upper and lower response pressures, the difference between the setpoints for the upper and lower response pressures (p_{dso} and p_{dsu}) should be at least 10% greater than the total of values given for Δp_{wo} and Δp_{wu}.

***) The upper response pressure is rounded up to full tens, for example 251 mbar-> 260 mbar

7.5 Decommissioning

For decommissioning, please refer to the documents listed under item 1 "General Information" and the system operator's work instruction.

Procedure (fig. 7.1)

- Slowly close the outlet shut-off valve (item 7.13) or
- Close the ball valves upstream of the valves and fittings (item 7.01).
- Depressurise the system (item 7.11).
- Close venting ball valve (item 7.11).

8 Maintenance

8.1 Maintenance Plan

The following sections describe the maintenance work required for optimal and trouble-free operation of the device.
If increased wear is detected during regular inspections, the required maintenance intervals must be shortened in accordance with the actual wear.
For any questions on maintenance work and intervals, please contact the manufacturer.
The intervals for monitoring and maintenance work are strongly dependent on the operating situation and the condition of the gas. This is why no fixed intervals can be given. For Germany, it is recommended to observe initially the maintenance periods according to the data given in DVGW Code of Practice G 495. For each system, this must be followed by determining the maintenance interval independently on a medium-term basis.

During maintenance work, the components must be cleaned and subjected to a thorough visual inspection. This is also necessary if irregularities in the operating behaviour have been detected during operation or during functional tests.

Damaged parts and O-rings dismounted during dismantling must be replaced with new ones.
The item numbers mentioned in chapter 6.2 (Maintenance Procedure) correspond to those listed in the spare parts drawings and spare parts lists.

It is recommended to stock the parts listed in chapter 9.3 for maintenance work.

Interval	Maintenance activities	Personnel
When required	Replacing O-rings	Qualified person
	Replacing diaphragms	
	Replacing the valve plate	
	Replacing sealing rings for the connections of the breather lines and measuring lines	

8.2 Maintenance Procedure

The maintenance procedure is described in detail step-by-step in our video tutorial and our pictorial descriptions. Instructions for our products can be found in the download area of our website. Should you have any problems, please feel free to contact us directly.

NOTICE

If components have been removed, make sure they are mounted correctly, reinstall all fastening elements and observe the screw tightening torques.

Prior to recommissioning, observe the following:

DANGER

- Make sure that all maintenance work has been carried out and completed in accordance with the data and information given in these instructions.
- Make sure that no unauthorised persons stay in the danger zone.
- Make sure that all covers and safety devices have been installed and are working properly.

For recommissioning, please refer to the relevant manufacturer's documentation of the gas pressure regulator installed in the system or chapter 1 and 5.4 as well as the work instructions of the system operator, and the other safety regulations for the system in which the regulator is installed.

Note

To guarantee smooth operation, we recommend always keeping a maintenance set in reserve.

8.3 Table of Screw Tightening Torques M_A

Item no.	Exception	RS 254 / 025 RS 254 / 050 RS 254 / 080 RS 254 / 100 RS 255 / 050	RS 254 / 150 RS 254 / 200 RS 255 / 080 RS 255 / 100
50		M8 / 18 Nm	M10 / 36 Nm
	RE 205	M10 / 36 Nm	
51		M8 / 18 Nm	M10 / 36 Nm
52		M8 / 18 Nm	M10 / 36 Nm
	DN 200		M12 / 62 Nm
53		M8 / 18 Nm	M10 / 32 Nm
	DN 200		M12 / 62 Nm
54		M6 / 8 Nm	M8 / 18 Nm

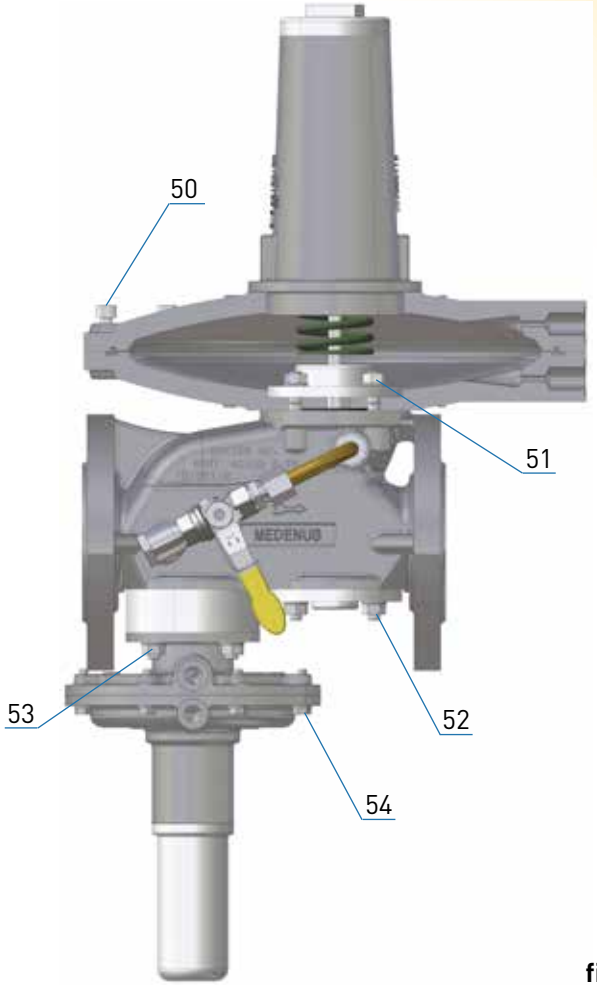

fig. 8.1

8.4 Lubricants Table

Components (apply a thin layer)	Lubricants
All O-rings	Syntheso Proba 270
All fastening and locking screws	
Balls	

8.5 Screw Retention

Components (apply a thin layer)	Adhesive and sealing agent
Stud bolts	Loctite-648

9 Troubleshooting

9.1 Gas Pressure Regulator

Description of the error	Possible cause	Elimination
Closing pressure too high No closing pressure	Actuator dirty or damaged	Check valve plate (seal) and valve seat for damage and dirt, replace valve plate, if necessary
	Static sealing elements defective	Replace O-rings
	Clamping of the compensating diaphragm has come off Compensating membrane is damaged or mounted incorrectly.	Check compensating diaphragm for fastening, damage, and correct fit, replace it, if necessary.
	Valve plate has become disconnected from the valve stem	Tighten nut under the valve plate
Unstable outlet pressure curve (vibrations, pulsation)	Device is working in the closing pressure range	Check regulator design
	Vibration resonance in the control system	Install restrictor plate in breather line Install baffle plate in measuring line Continue closing restrictor in measuring line by turning clockwise * Install a harder spring (setpoint spring of the next higher control range) Check setting of gas consumption devices Use of throttle valve RSD (optional accessory)
Control deviation too large	Unfavourable connection of the measuring line	Select a measuring point with steady flow, check measuring point
	Sluggishness of the device due to dirt	Subject device to maintenance
	Main diaphragm or compensating diaphragm defective or mounted incorrectly	Check diaphragm and replace if necessary
	Wrong regulator size selected Wrong setpoint spring selected Wrong control cone selection	Check controller design, setpoint spring / control cone and replace if necessary
	Inlet pressure supply is insufficient (pressure losses in the supply line too high)	Increase inlet pressure Check pipeline cross-section Check built-in filter
Inadmissible pressure peak Dynamic closing pressure too high	Damping of the device too high Control system too dynamic	Continue opening restrictor in measuring line by turning anticlockwise Remove restrictor plate from breather line Check breather lines and dimension them larger, if necessary. Replace breather valve with safety diaphragm or breather line
	Closing speed of downstream shut-off devices too high	Reduce closing speed of shut-off device
Noise	Gas velocity too high	Check regulator design
	Sluggishness of the device due to dirt / wear	Perform maintenance on actuator If worn-out mechanically, replace it, if necessary
Gas escapes through breather line	Fastening of the main diaphragm has come off Main diaphragm is damaged or has been mounted incorrectly	Check diaphragm for fastening, damage and correct fit
	Internal leakage gas SRV is set too low or is not tight	Correct settings of leakage gas SRV Check O-ring for damage and dirt, replace if necessary

*) Excessive damping limits the actuation speed.

**) Normal flow noise does not constitute a fault. However, this noise can be reduced by installing a noise reduction device.

Note

9.2 Safety Shut-Off Valve

Description of the error	Possible cause	Elimination
No internal tightness in closed position	Actuator dirty or damaged	Check valve seat and valve plate (seal) for damage and dirt
	Pressure compensation valve (internal bypass) in the actuator dirty or sealing elements damaged	Check O-rings in the pressure compensation valve or at the SSV spindle and replace them, if necessary
SSV cannot be opened	No pressure compensation at actuator	Pressure compensation by opening the bypass ball valve (item 5.28)
SSV does not engage	Difference between response pressure and operating pressure or between upper and lower response pressure is too small	Correct response pressure settings consider required re-engagement differential (see RS 254 / 251 product overview)
	Only in case of underpressure switching: Diaphragm in the control device defective or incorrectly installed	Check diaphragm and replace it, if necessary
	Pressure at the measuring point too high or low (only with underpressure switching)	Lower or increase pressure at measuring point to operating value (GPR setpoint value)
	Sluggishness of the trigger mechanism due to dirt / wear	Service switching device and replace it, if worn-out mechanically
Permissible response pressure group is exceeded Irregularities in response behaviour	Difference between response pressure and operating pressure or between upper and lower response pressure is too small	Correct response pressure settings consider required re-engagement differential (see RS 254 / 251 product overview) *
	Diaphragm in the control device incorrectly installed	Check whether diaphragm is twisted
	Sluggishness of the trigger mechanism due to dirt / wear	Service switching device and replace it, if worn-out mechanically
Gas escapes through breather line	Diaphragm clamping has become loose Diaphragm is damaged or has been mounted incorrectly O-ring sealing (item 35) dirty or damaged	Check diaphragm for fastening, damage and correct fit Check O-ring and replace it, if necessary

*) The pressure differences between GPR, SSV and system SRV must consider the response and closing pressure groups as well as the re-engagement differentials of the devices in order to avoid any unintended SRV switching.

Note

10 Replacement and Disposal

After the device has reached the end of its useful life, it must be dismounted and disposed of in an environmentally compatible manner.
During dismounting, components that may present a risk of injury by contamination depending on the medium are removed. Depending on the processed medium, the components must be properly decontaminated. Components capable of diffusion (diaphragm, O-ring, etc.) may have to be taken to a special disposal unit, depending on the medium used. If no return or disposal agreement has been reached, dismantled components should be recycled:

NOTICE

- Metals should be scrapped
- The remaining components should be disposed of after sorting according to material.

For technical information, please contact our customer service:

MEDENUS Gas-Druckregeltechnik GmbH
Im Langen Feld 3
D-57462 Olpe

Phone +49 (0) 2761 / 82788-0
Fax +49 (0) 2761 / 82788-9

E-Mail info@medenus.de
Internet www.medenus.de

In addition, we are always interested in information and experience resulting from the application and which can be valuable for improving our products.

11 Spare Parts

11.1 Spare Parts Drawing RS 254 / RS 255 DN 25 - DN200

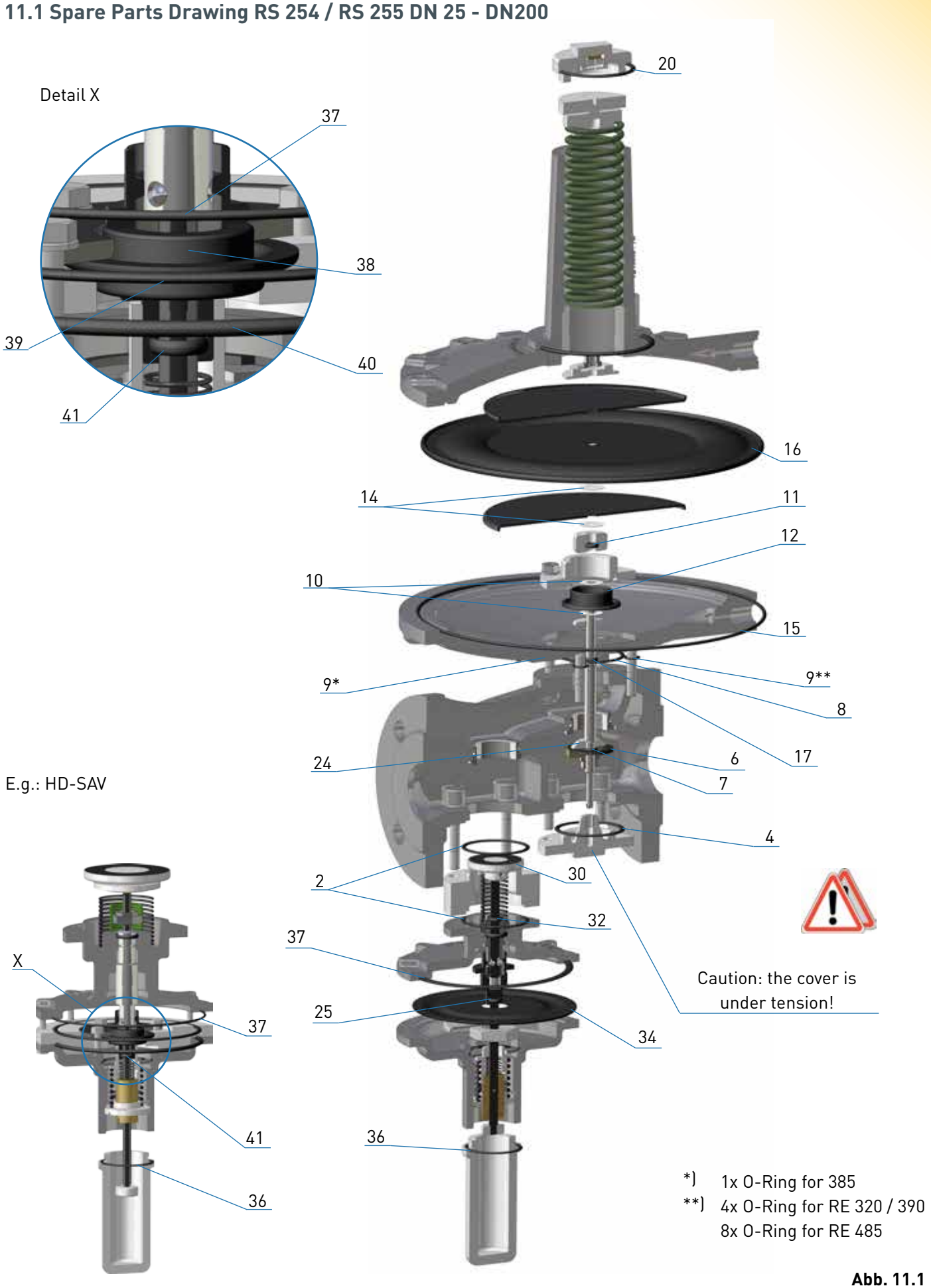

*) 1x O-Ring for 385
**) 4x O-Ring for RE 320 / 390
8x O-Ring for RE 485

Abb. 11.1

11.2 Optional Spare Parts Drawing

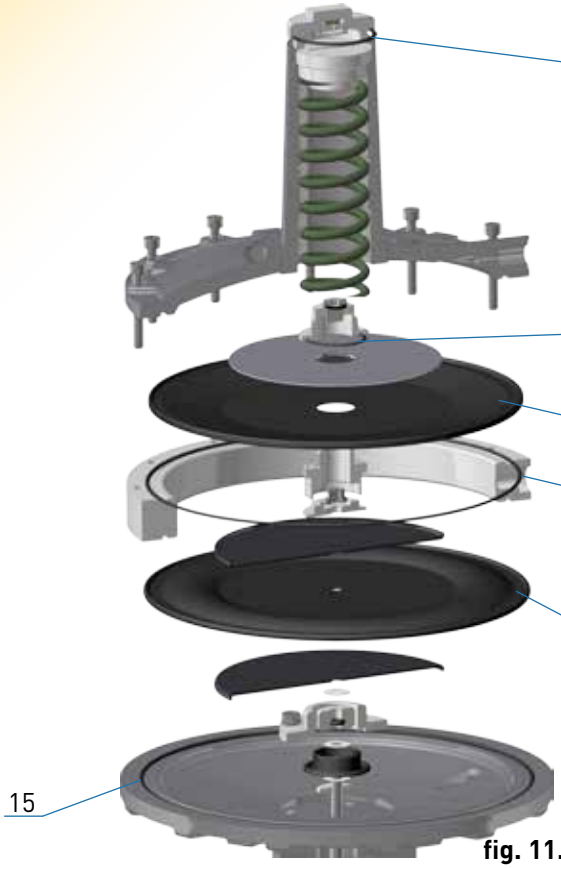

fig. 11.2

RS 254 / 251 shown with safety diaphragm
Version 1

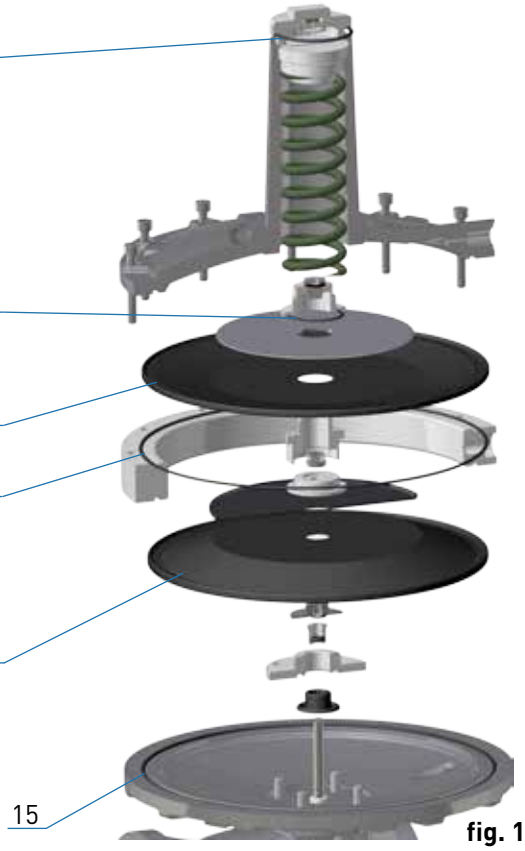

fig. 11.3

RS 254 / 251 shown with safety diaphragm
Version 2

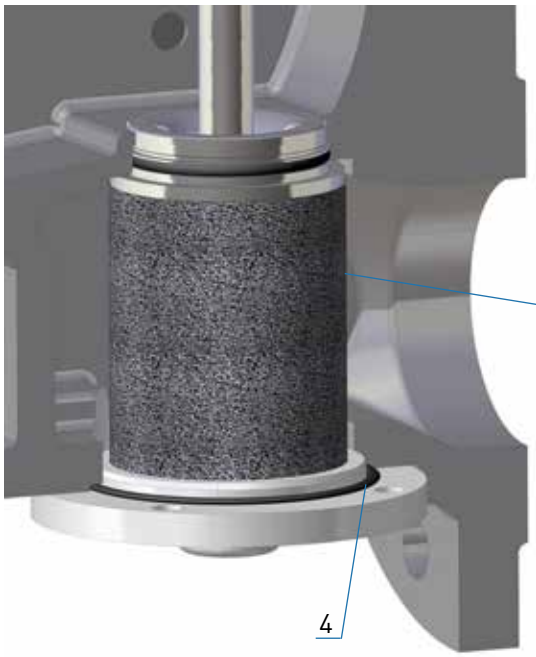

fig. 11.4

RS 254 / 251 shown with noise reduction

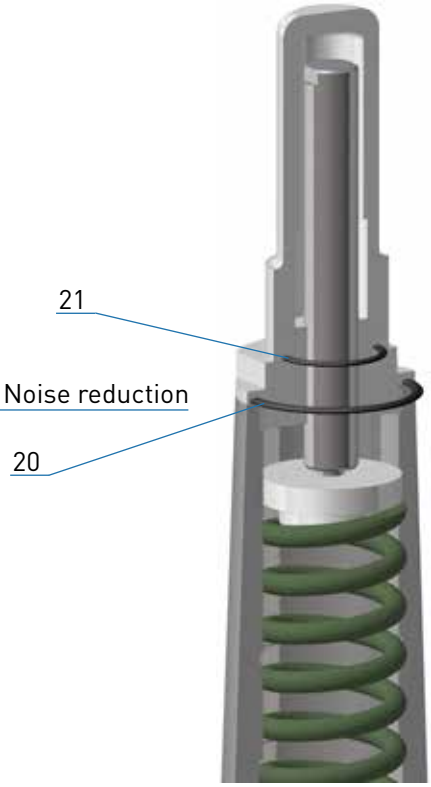

fig. 11.5

RS 254 / 251 shown with high pressure shaft

11.3 Parts for Maintenance Work

Main diaphragm and O-ring

Item no.	Name	Quantity pcs.	RS 254 / 025 RS 254 / 050			RS 254 / 080; RS 254 / 100; RS 255 / 050 RS 255 / 080; RS 254 / 150; RS 255 / 100; RS 254 / 200				
			RE 160	RE 205	RE 320	RE 205	RE 275	RE 385 / 390 MB	RE 385 / 390 GMB	RE 485
15	O-ring	1		O-029	O-033	O-029	O-041	O-042	O-042	O-043
16	Diaphragm	1	M-111	M-121	M-141	M-122	M-132	M-152	M-162	M-172
Main diaphragm set (Version 1) order number:			**M-111**	**MS-121**	**MS-141**	**MS-122**	**MS-132**	**MS-152**	**MS-162**	**MS-172**
15	O-ring	1		O-029	O-033	O-029	O-041	O-042	O-042	O-043
16	Diaphragm	1	M-112	M-122	M-142	M-122	M-132	M-152	M-162	M-172
Main diaphragm set (Version 2) order number:			**M-112**	**MS-122**	**MS-142**	**MS-122**	**MS-132**	**MS-152**	**MS-162**	**MS-172**

Intermediate Diaphragm

Item no.	Name	Quantity pcs.	Valve	RS 254 / 025 RS 254 / 050	RS 254 / 080 RS 254 / 100 RS 255 / 050	RS 255 / 080	RS 254 / 150 RS 255 / 100	RS 254 / 200
12	Diaphragm	1	17.5	**M-001**				
			27.5	**M-002**	**M-003**			
			32.5	**M-004***	**M-005**			
			42.5		**M-006**	**M-007**	**M-007**	
			52.5		**M-008****	**M-009**	**M-009**	
			65			**M-010**	**M-010**	
			85			**M-011**	**M-011**	
			95				**M-012**	**M-012**
			115					**M-013**

Valve plate

Item no.	Name	Quantity pcs.	Valve	RS 254 / 025 RS 254 / 050	RS 254 / 080 RS 254 / 100 RS 255 / 050	RS 255 / 080	RS 254 / 150 RS 255 / 100	RS 254 / 200
6	Valve plate	1	17.5	**VT-001**				
			27.5	**VT-002**	**VT-003**			
			32.5	**VT-004***	**VT-005**			
			42.5		**VT-006**	**VT-006**	**VT-006**	
			52.5		**VT-007****	**VT-007**	**VT-007**	
			65			**VT-008**	**VT-008**	
			85			**VT-009**	**VT-009**	
			95				**VT-010**	**VT-010**
			115					**VT-011**

*) only in RS254 / 050 **) only in RS254 / 100 and RS255 / 050

Valve Plate SSV / Diaphragm SSV

Item no.	Name	Number	Exception	RS 254 / 025 RS 254 / 050	RS 254 / 080 RS 254 / 100 RS 255 / 050	RS 255 / 080	RS 254 / 150 RS 255 / 100	RS 254 / 200
30	Valve plate	1		**VT-201**	**VT-202**	**VT-206**	**VT-208**	**VT-210**
34	Diaphragm	1		**M-201**	**M-201**	**M-201**	**M-202**	**M-202**
38	Diaphragm	1	only for HD-SAV	**M-014**	**M-014**	**M-014**	**M-015**	**M-015**

O-Ring and Sealing Ring Sets

Item no.	Name	Quantity pcs.	Exception	RS 254 / 025 RS 254 / 050	RS 254 / 080 RS 254 / 100 RS 255 / 050	RS 255 / 080	RS 254 / 150 RS 255 / 100	RS 254 / 200
2	O-ring	1		O-014	O-018	O-036	O-044	O-046
		2	DN 50	O-014				
		2	before 1992			O-036		
4	O-ring	1		O-014	O-018	O-037	O-044	O-046
7	O-ring	1		O-007	O-009	O-009	O-009	O-009
8	O-ring	1		O-014	O-035	O-038	O-026	O-026
			RE 320	O-004				
9	O-ring	1		O-019	O-039	O-040	O-031	O-031
		4	RE 320	O-002				
			RE 390		O-002			
		8	RE 485				O-003	O-003
10	NBR-ring	2		N-001	N-002	N-002	N-002	N-002
			Valve 27.2		N-001			
			Valve 17.5	No NBR-ring				
11	O-ring	1		O-007	O-009	O-009	O-009	O-009
			Valve 27.2		O-007			
14	NBR-ring	2		N-001	N-003	N-003	N-003	N-003
17	O-ring	1		O-008				
20	O-ring	1		O-015	O-015	O-036	O-036	O-036
			sealing cap Cast	O-014	O-014	O-015	O-015	O-015
21	O-ring	1		O-012	O-012	O-016	O-016	O-016
24	O-ring	1		O-007	O-009	O-009	O-009	O-009
25	O-ring	1		O-001	O-001	O-001		
32	O-ring	1		O-007	O-007	O-007	O-009	O-009
35	O-ring	1		O-007	O-007	O-007	O-009	O-009
36	O-ring	1		O-013	O-013	O-013	O-014	O-014
37	O-ring	1		O-052	O-052	O-052		
39	O-Ring	1		O-022	O-022	O-022		
40	O-Ring	1		O-034	O-034	O-034	O-025	O-025
41	O-Ring	1		O-011	O-011	O-011	O-009	O-009
O-Ring Satz Bestellnummer:				**OS-001**	**OS-002**	**OS-003**	**OS-004**	**OS-005**
O-Ringsatz Bestellnummer (für Stellgerät mit HD-SAV):				**OS-301**	**OS-302**	**OS-303**	**OS-304**	**OS-305**

Safety diaphragm

Item no.	Name	Quantity pcs.	RS 254 / 025 RS 254 / 050		RS 254 / 080; RS 254 / 100; RS 255 / 050 RS 255 / 080; RS 254 / 150; RS 255 / 100; RS 254 / 200			
			RE 205	RE 320	RE 205	RE 275	RE 385 / 390	RE 485
22	O-ring	1	O-029	O-033	O-029	O-041	O-042	O-043
23	Diaphragm	1	M-123	M-143	M-123	M-133	M-163	M-173
26	O-ring	1	O-013	O-013	O-013	O-013	O-013	O-013
Safety diaphragm set order number:			**MS-123**	**MS-143**	**MS-123**	**MS-133**	**MS-163**	**MS-173**

Example:

Name	Type	DN - nominal width	RE - Control device	D - nozzle (valve diameter)	SSV Control unit	Main-diapraghm	Option
Gas pressure regulator:	RS254	080	390*	27,5	MD-R	MB*	SM...

Spare parts according to tables in 11.3

Main diaphragm and O-ring: **MS-152**
Intermediate diaphragm: **M-003**
Valve plate: **VT-003**
Valve plate SSV: **VT-202**
Diaphragm SSV: **M-201**
O-ring and sealing ring set: **OS-002**
Safety diaphragm: **MS-163**

The allocation of individual parts is done according to the item no. in the tables in 11.3, conforming to the spare parts drawings in 11.1 and 11.2.

Note

When ordering, please state the serial number from the type plate.

Note

Example Composition of the factory number

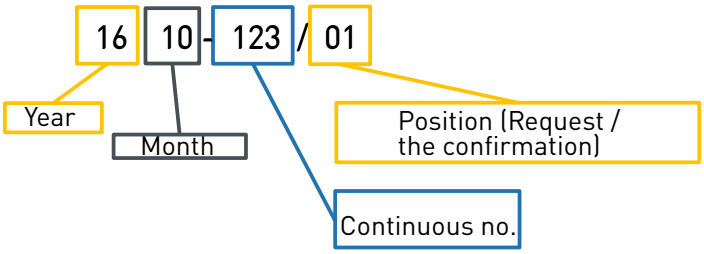

The replacement of parts must be performed only by trained and authorized persons.

NOTICE

*) When selecting the main diaphragm set for control device RE 385 / 390, a distinction has to be made between MB and GMB. The GMB diaphragm is standard equipment and is therefore not mentioned separately in the controller designation.

Notes

12 Accessories / Options

12.1 Noise reduction

12.1.1 Use

- Gas pressure regulators RS 250 / RS 251
- Gas pressure regulators RS 254 / RS 255
- Gas pressure regulators RSP 254 / RS 255
- Gas pressure regulators R 101

12.1.2 Application / Function

The noise reduction made of metallic foam is inserted into the housing of the gas pressure regulator between the valve seat and the housing cover and reduces noise in the gas pressure regulator produced by the flow rate by up to -15 dB (±3 dB).

12.1.3 Mounting

- Unscrew the cover
- Slide the noise reduction (metallic foam) over the spindle and the valve plate until it makes contact with the valve seat.
- Screw down the cover again, thus pressing the noise reduction firmly against the valve seat*

12.1.4 Determination of the sound pressure level L_A

The noise of gas expansion at a maximum flow rate of approx. 65 m/s on the outlet side is shown.

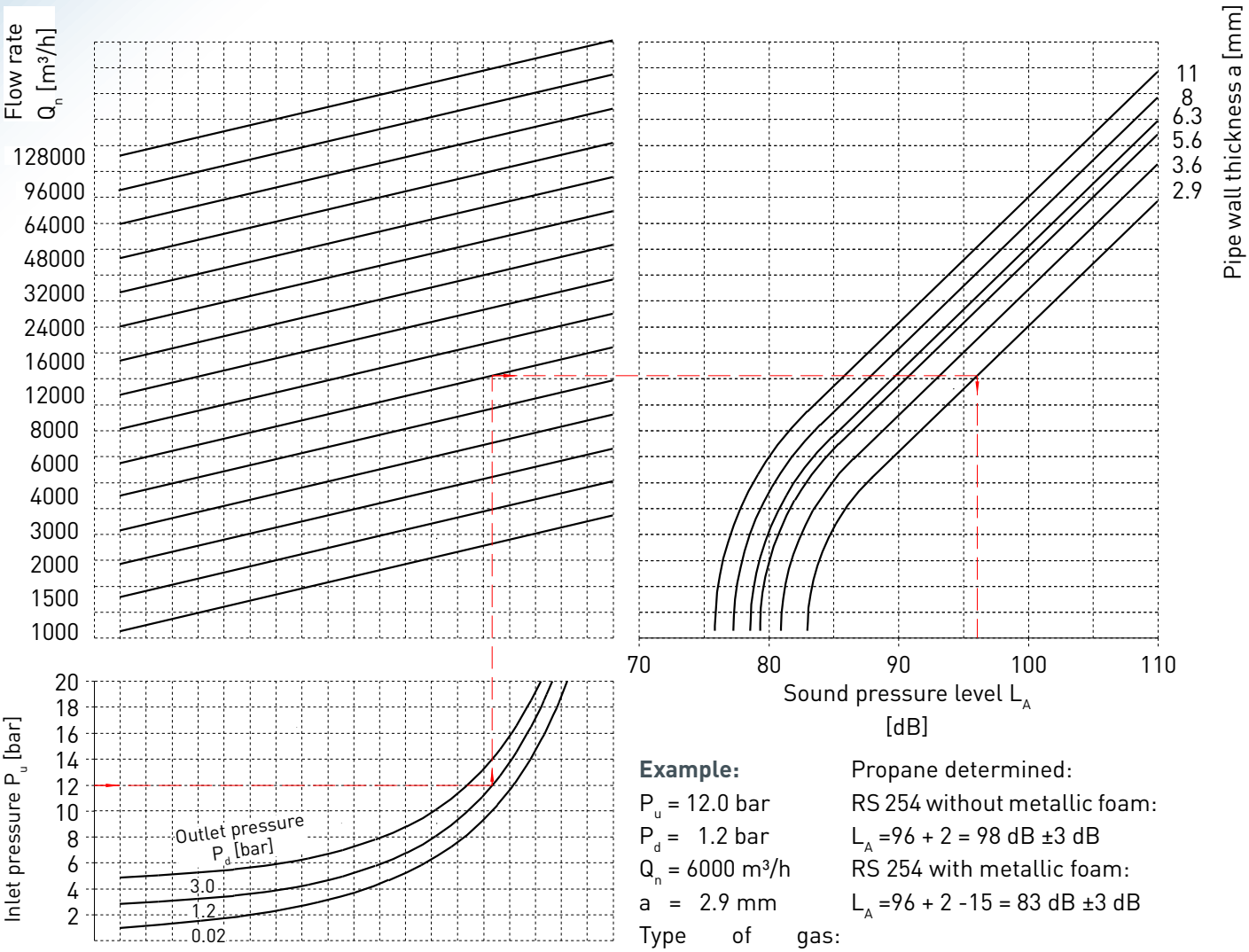

Example:

P_u = 12.0 bar
P_d = 1.2 bar
Q_n = 6000 m³/h
a = 2.9 mm
Type of gas: Propane determined:

RS 254 without metallic foam:
L_A =96 + 2 = 98 dB ±3 dB
RS 254 with metallic foam:
L_A =96 + 2 -15 = 83 dB ±3 dB

Reference site: Outlet of the gas pressure regulator, lateral distance 1m
Accuracy: ±3 dB
Correction factor for metallic foam design: ΔL_A up to -15 dB

Correction factors for some gases and gas mixtures

Gas, gas mixtures	ΔL_A [dB]
Acetylene	0
Natural gas	0
Helium	-5.5
Air	+1
Methane	0
Propane	+2
Hydrogen	-9

12.2 High-pressure spindle

12.2.1 Use

- Gas pressure regulators RS 250 / RS 251
- Gas pressure regulators RS 254 / RS 255
- Gas pressure regulators R 100 / R 100-U
- Gas pressure regulators R 101

12.2.2 Application / Function

The HDS high-pressure spindle is used for simplified adjustment of the control spring in the gas pressure regulator. For the adjustment of particularly strong control springs, the use of a high-pressure spindle is mandatory. (See p. 16 - 17.)

12.2.3 Mounting

- Unscrew the sealing cap
- Unscrew the setting screw anticlockwise
- Take off the spring plate from the spring
  Notice! Do not lose the steel ball!
- Remove the built-in spring
- Insert a new spring
- Replace spring plate
  Notice! Do not forget the steel ball!
- Screw high-pressure cap with high-pressure spindle into the spring dome

  Do not forget the O-Ring
- On the width across flats (AF 17) of the spindle, set the desired outlet pressure
- Screw on the sealing cap
  Do not forget the O-Ring

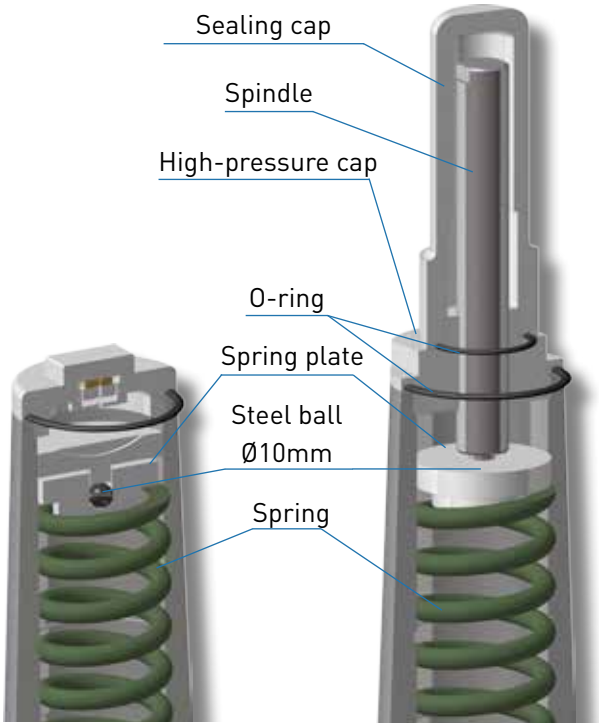

Standard model HD spindle design

12.2.4 Mounting instructions

- **Setting with HD spindle (small spring dome / Ø 70mm)**
  - Screw-in depth T min: 111 mm
  - Screw-in depth T max: 65 mm
- **Setting with HD spindle (large spring dome / Ø 105mm)**
  - Screw-in depth T min: 130 mm
  - Screw-in depth T max: 70 mm
- **Dismounting height HD spindle (small spring dome / Ø 70mm)**
  - X: 260 mm
- **Dismounting height HD spindle (large spring dome / Ø 105mm)**
  - X: 410 mm

NOTICE All threads must be oiled!

12.3 BV breather valve

12.3.1 Use

- On SAV control devices
- On regulators (pilots)
- With low-dynamic regulation sections (one full stroke)
- On the SRV (SL10)

12.3.2 Application / Function

The breather valve is used as replacement for the costly and time-consuming laying of breather lines and for securing the installation room against inadmissible gas escape from diaphragm comparator compartments of gas pressure regulators and safety shut-off valves.

In compliance with § 7.5 of EN 12186:2000+A1, the use of the BV guarantees that in case of a defect of the working diaphragm, escape of gas from the breather connection of the gas pressure regulator or of the safety shut-off valve of more than 30 l/h is prevented.

12.3.3 Technical Data

- **Type** BV
- **Max. allowable pressure PS** 25 bar
- **Max. operating pressure p_{max}** 25 bar
- **Max. allowable flow rate** 30 l/h
- **Connection type** Male thread G 3/8" or G 1/4"
- **Temperature range class 2** (operating/ambient temperature) -20 °C to +60 °C

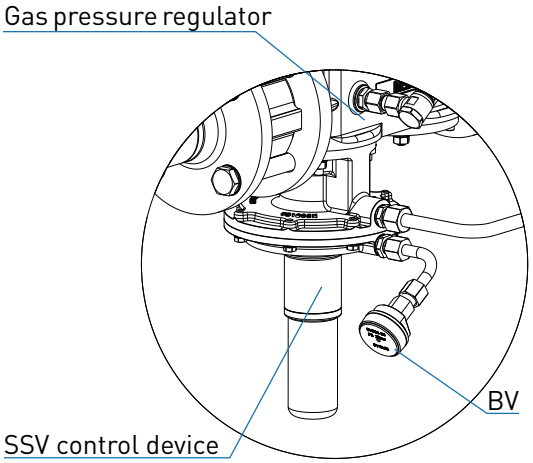

Application example on the SSV

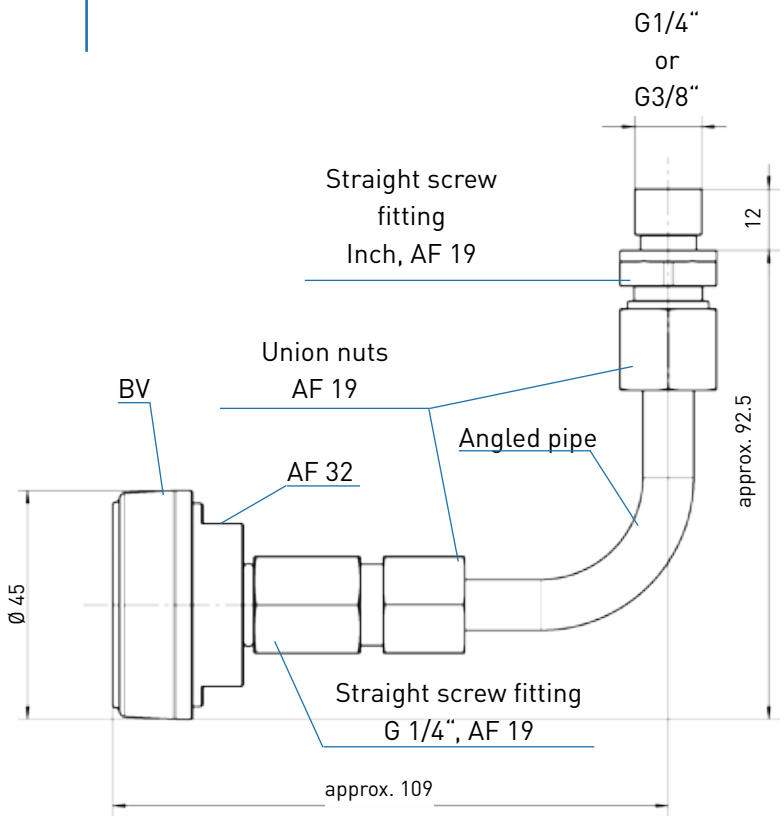

12.4 RSD restrictor valve

12.4.1 Use

- For installation in the measurement line of the gas pressure regulator

12.4.2 Application / Function

- For finer adjustment of the control behaviour of the regulator
- For vibration-free outlet pressure regulation

The RSD is a restrictor valve that affects the volumetric flow in the measurement line from outside by means of a continuously adjustable narrowing of the cross-section. The adjustment is done by means of an Allen key (4mm).

12.4.3 Technical Data

- **Type** RSD
- **Max. allowable pressure PS** 5 bar*
- **Max. operating pressure p_{max}** 5 bar*
- **Connection type** on both sides G 1/4" Female thread
- **Material** Stainless steel
- **Temperature range, Class 2** (operating/ambient temperature) -20°C to +60°C
- **Ex protection**
  The mechanical components of the device do not have any potential ignition sources of their own and are thus not covered by the scope of ATEX 95 (94/9/EC).

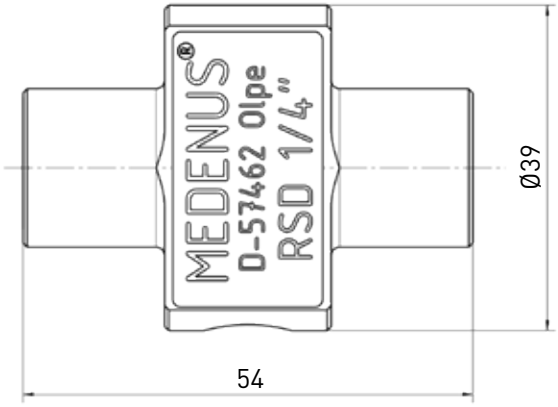

*) on request: also available for 25 bar

12.4.4 Application example

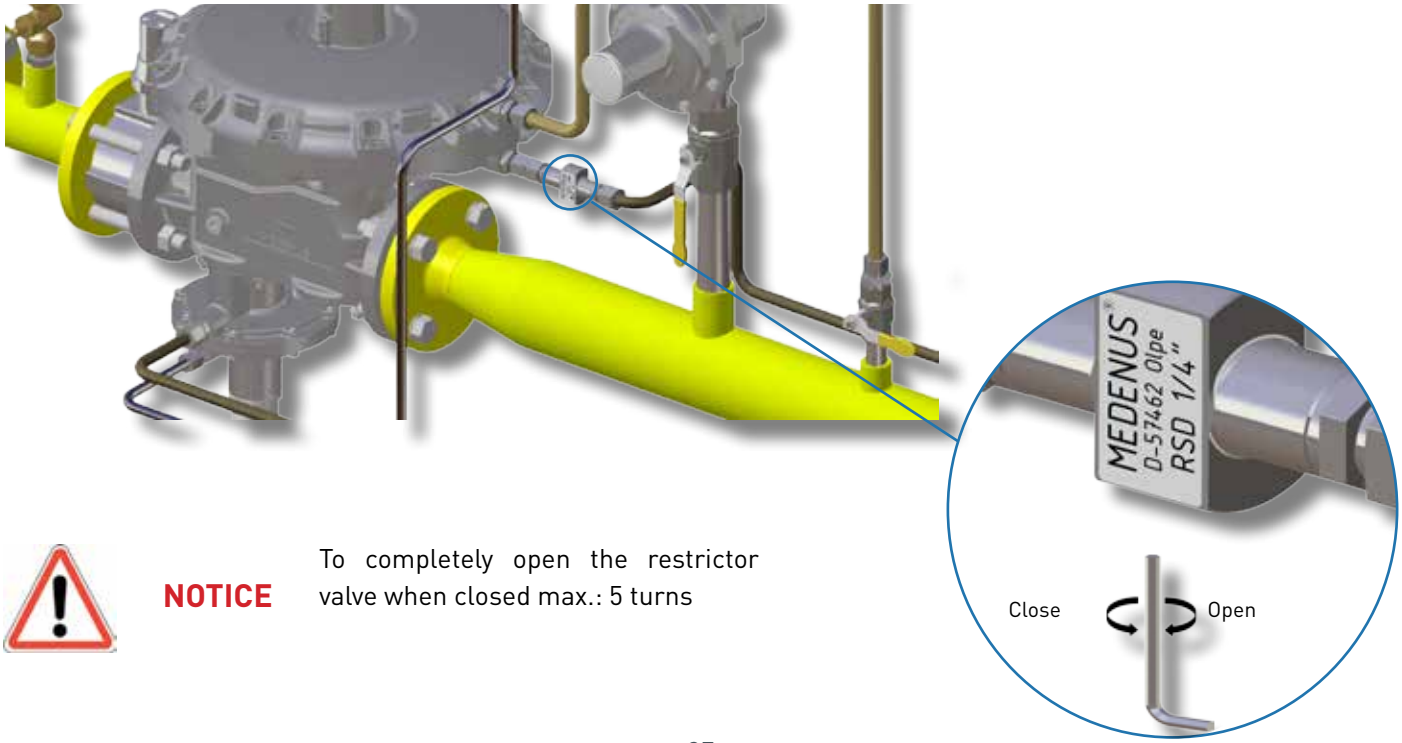

NOTICE To completely open the restrictor valve when closed max.: 5 turns

12.5 Signal transmitter/ Reed contact

12.5.1 Use

- On SAV control devices

12.5.2 Application / Function

The signal transmitter, in conjunction with products from Medenus GmbH, is used for monitoring the position (position closed or open) of the safety shut-off valve via remote display.

A built-in neodymium magnet in the pull knob of the SSV and a set switching distance to the Reed contact cause a sensor to query the position of the safety shut-off valve and to transmit a signal via remote display. If the SSV drops into the closed position, the switching distance will be exceeded and the sensor will lose the signal. This guarantees continuous monitoring of the SSV control devices.

12.5.3 Technical Data

Signal transmitter model	**D-M9P(V)**
• Verdra**ht**ung	3 Draht
• Output	PNP
• Application	IC control/ PLC relay
• Supply voltage	5/12/24VDC (4.5 to 28VDC)
• Current consumption	max. 10 mA
• Operating voltage	-
• Load current	max. 40mA
• Internal voltage drop	max. 0,8V
• Leakage current	max. 100 µ A at 24VDC
• Response time	max. 1ms
• Operational status indicator	ON: Red LED
• Electrical inputs	potted cables
• Connecting cables	oil-resistant vinyl cables 2.7 x 3.2 oval, 0.15 mm2, 3-wire (D-M9P)
• Shock resistance	1000 m/s2
• Insulation resistance	max. 50M Ω at 500VDC Mega
• Test voltage	AC 1000 V over 1 minute (connecting cable, between housings)
• Ambient temperature	-10 to 60°C
• Degree of protection	IP67 IEC60529, JISC0920

12.5.4 ATEX marking

II 3G Ex nA II T5 X -10°C ≤ Ta ≤ +60°C
II 3D tD A22 IP67 T93°C X

- Device group II
- Category 3
- Gas- (G) and dust-containing (D) environments
- Ex – Conformity with European standards
- nA – spark-free device
- II – For all types of gas
- T5 – Temperature classification
- tD – protected by housing
- A22 – for Zone 22
- IP67 – Degree of protection
- Ta – Ambient temperature
- T93°C – max. surface temperature
-
- X – Special conditions, see instructions

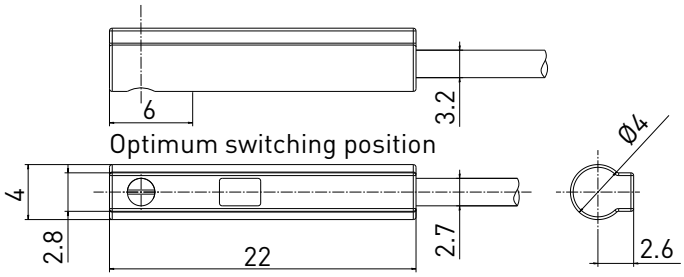

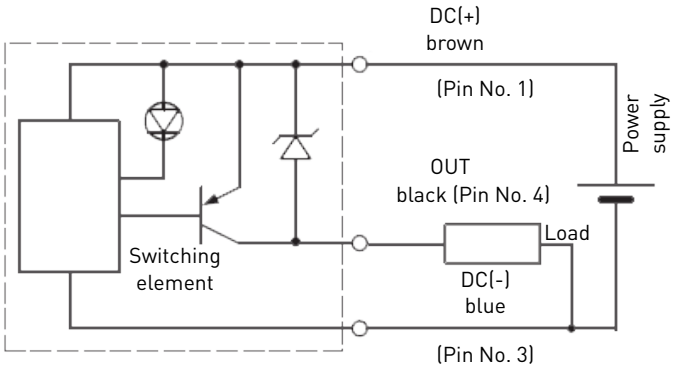

12.5.4 Mounting

- Replace the pull knob of the SSV spindle with the pull knob with the neodymium magnet.
- With the SSV open, slide the signal transmitter into the groove provided for this purpose at the SSV cap. (Until the operational status indicator is lit)
- Finally fasten the signal transmitter to the desired position by tightening* the fastening screw M2.5 x 4 using a precision screwdriver.

- Perform a functional test by removing the SSV cap and thus the Reed contract from the neodymium magnet. When the contact gets lost, the operational status indicator will go out.

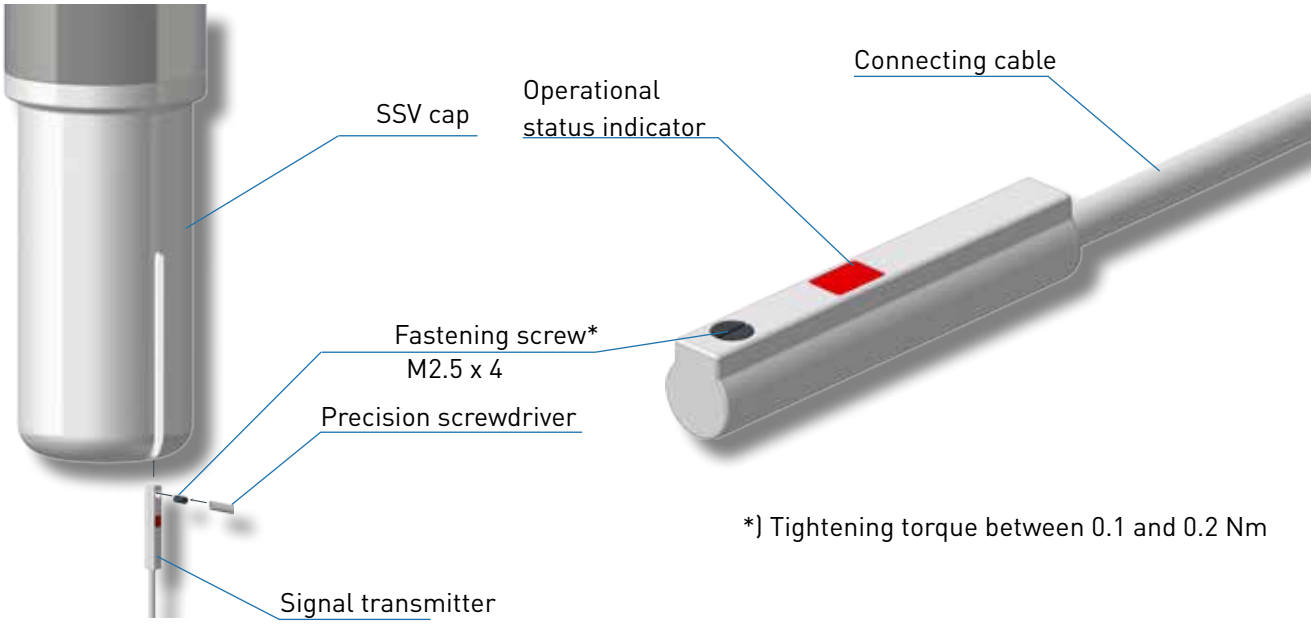

*) Tightening torque between 0.1 and 0.2 Nm

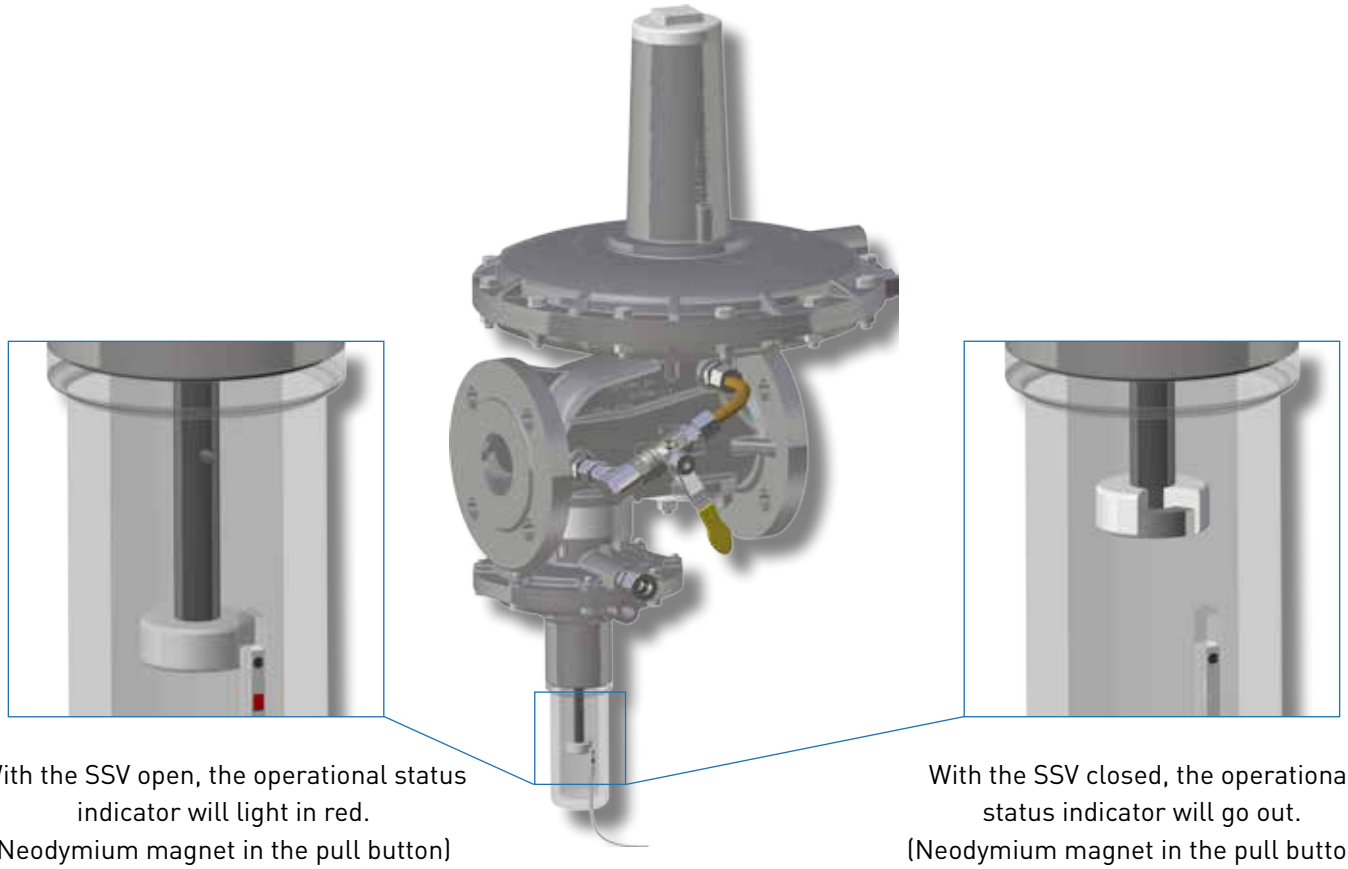

With the SSV open, the operational status indicator will light in red. (Neodymium magnet in the pull button)

With the SSV closed, the operational status indicator will go out. (Neodymium magnet in the pull button)

Safety instructions

Must be read prior to using the neodymium magnet!
Important safety instructions for general and responsible handling of the neodymium magnet

Please pass on these instructions to all employees, customers and other people who are handling our products or parts derived from them.
Please read these instructions carefully before using the neodymium magnets. For any further questions, please feel free to contact us.
"magnets4you GmbH" shall not assume any liability for damage caused by improper handling of the magnets.

Hazards caused by magnets



Risk of injury caused by crushing
Risk of injury caused by splinters
Hazards caused by magnetic fields
Pacemakers, magnetic data carriers (credit cards, memory cards, etc.)
Electronic devices (mobile phones, computers, monitors, etc.)
Risk of fire
Health risks in contact with foods and drinking water

Handling

Do not place any iron-containing parts (tools, nails, knives, etc.) in the vicinity of the magnets.
Magnets can collide or adhere to other metallic surfaces, possibly resulting in splinters or brittleness.
Wear safety goggles and protective gloves – in order to avoid eye injuries and crushing!
Persons wearing pacemakers must not be exposed to magnetic fields.
Electronic devices and magnetic data carriers must be kept away from magnetic fields.
Magnets should not be processed mechanically, sawed or drilled.
The resulting drilling/magnet dust is extremely flammable.
Alternatively, magnets can be glued / sunk for fastening.
Keep the magnets away from open heat and flames!
The magnets are provided with a thin coating (nickel, gold or zinc) that can be removed or changed by excessive use.

It is recommended never to use AlNiCo magnets in direct contact with foods, since metal ions can dissociate in water-containing media.

Transport

When shipping magnets, the current regulations for scattered magnetic fields during air transport must be observed (IATA Hazardous Goods Regulations).
These regulations also apply to built-in magnets.

Neodymium magnets and end products prepared from them may not be imported directly or indirectly to the following countries: USA, Canada and Japan.

Increased caution for children

Keep neodymium magnets out of the reach of children. Children are at risk of playing with the magnets, inserting them into sockets, swallowing them or their fingers getting caught!
Children under the age of 10 should not handle magnets at all.

Source: magnets4you GmbH / Safety instructions Use of neodymium magnets / URL http://www.magnet-shop.net / Last update: 11/2013

12.6 Inductive signal transmitter

12.6.1 Use

- On SAV control devices

12.6.2 Application / Function

The inductive transmitter, in conjunction with products from Medenus GmbH, is used for monitoring the position (position closed or open) of the safety shut-off valve via remote display.

A sensor queries the position of the safety shut-off valve and a signal is transmitted via remote display. If the SSV drops into the closed position, the switching distance will be exceeded and the sensor will lose the signal. This guarantees continuous monitoring of the SSV control devices.

12.6.3 ATEX marking

Field of application	Certificate	Group, category, type of ignition protection
ATEX 1G	PTB 00 ATEX 2048 X	Ex II 1G Ex ia IIC T6...T1 Ga The Ex-relevant marking can also be printed on the enclosed adhesive label.
ATEX 2G	PTB 00 ATEX 2048 X	Ex II 1G Ex ia IIC T6...T1 Ga The Ex-relevant marking is shown on the enclosed adhesive label.
ATEX 3G (ic)	PF 13 CERT 2895 X	Ex II 3G Ex ic IIC T6...T1 Gc The Ex-relevant marking is shown on the enclosed adhesive label.
ATEX 1D	PTB 00 ATEX 2048 X	Ex II 1D Ex ia IIIC T135°C Da The Ex-relevant marking can also be printed on the enclosed adhesive label.

12.6.4 Technical Data

- Switching element function: NAMUR opener
- Switching distance sn: 2 mm
- Installation: flush
- Safe switching distance sa: 0 ... 1.62 mm
- Reduction factor rAl: 0.23
- Reduction factor rCu: 0.21
- Reduction factor rV2A: 0.7
- Rated voltage Uo: 8 V
- Operating voltage UB: 5 ... 25 V
- Switching frequency f: 0 ... 1000 Hz
- Hysteresis H: 1 ... 10 typ. 3 %
- Polarity reversal protection: protected against polarity reversal
- Short-circuit protection: yes
- Current consumption
  - Measuring plate does not detect: 3 mA
  - Measuring plate detects: 1 mA
- Switching state indication: Multi-hole LED, yellow
- EMC according to: IEC / EN 60947-5-2:2004; NE 21
- Standards: DIN EN60947-5-6 (NAMUR)
- Ambient temperature: -25 ... 100 °C (248 ... 373 K)
- Storage temperature: -40 ... 100 °C (233 ... 373 K)
- Connection type: V1 Device plug
- Enclosure material: Stainless steel
- Front face: PBT
- Degree of protection: IP67
- Use in hazardous area: see operating instructions
- Category: 1G; 2G; 1D

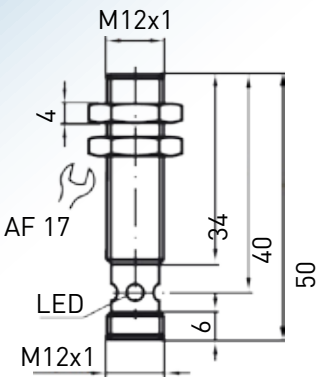

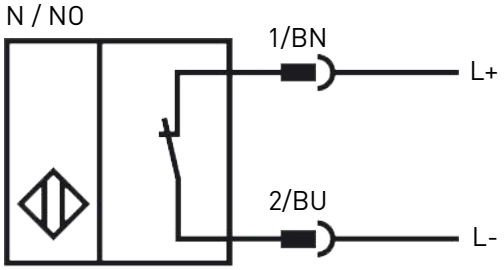

12.6.5 Mounting

- Unscrew the SSV cap of your Medenus gas pressure regulator (-) and replace it with the SSV cap with M12 threaded hole for the inductive transmitter and the pull knob, if necessary.

  (During mounting, make sure that the O-ring has been inserted into the SSV cap)
- Now screw the inductive transmitter into the thread provided for this purpose, ensuring that the inductive transmitter has a max. switching distance to the pull knob of 2mm.

- Then secure the inductive transmitter with the enclosed locknuts AF 17.
  (lock the ribbed sides against each other)
- Finally connect the delivered connecting cable to the inductive transmitter by means of a screw cap.

- Check the function of the display in the open and closed positions of the SSV.

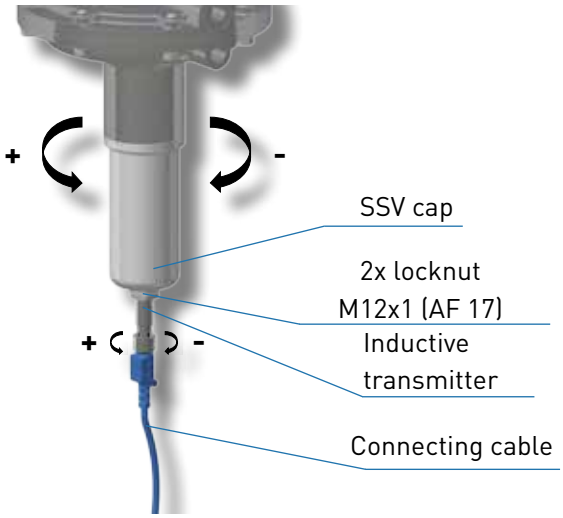

With the SSV open, the operational status indicator of the inductive transmitter will light in yellow. With the SSV closed, the operational status indicator of the inductive transmitter will go out.

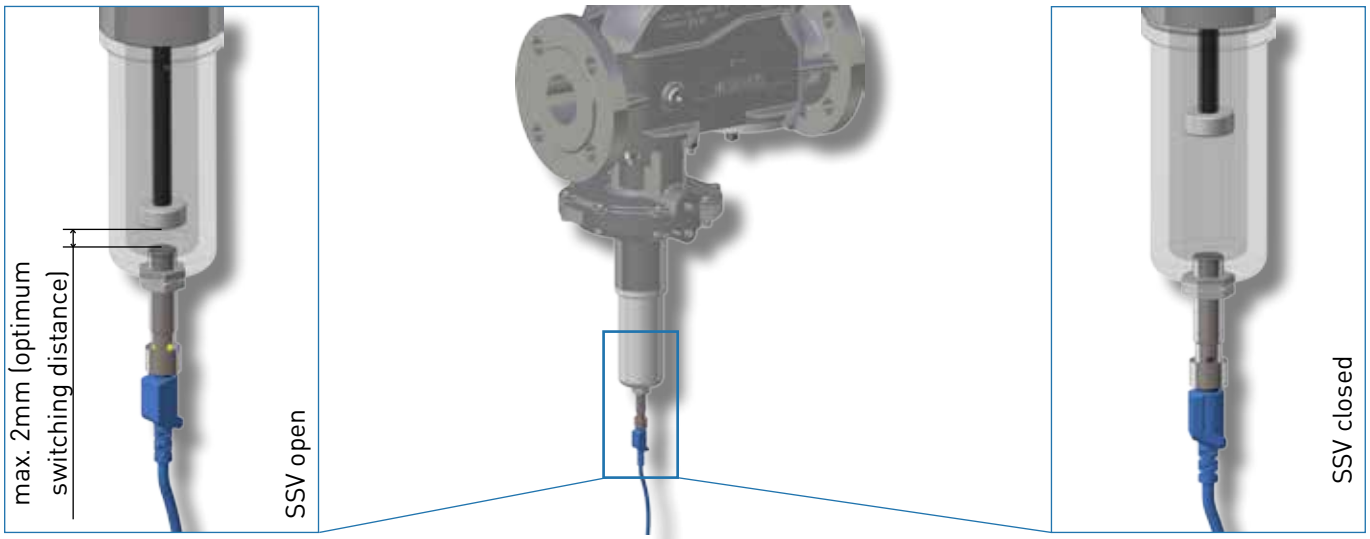

12.7 Choke washer

12.7.1 Use

- On regulators (pilots)

12.7.2 Application / Function

If the outlet pressure of the regulator varies too much, this can be remedied by installing restrictor and baffle plates in the breather line or the impulse (measurement) line.

A set of the restrictor and baffle plates is located in the sealing cap (pos. 7) on the spring cap (pos. 4) of the regulator.

12.7.3 Mounting

1. Remove the choke washer by unscrewing the sealing cap (pos. 7) from the regulator and then the locking screw (pos. 8) from the sealing cap (pos. 7).

2. Installation of the restrictor plate in the breather line

   First the choke washer (pos. 9) is installed in the breather line.
   The choke washer is installed behind the Ermeto screw fitting (pos. 5) in the bore of the diaphragm hood top (pos. 3).
   Screw the sealing cap (pos. 7) again onto the spring cap (pos. 4) and put the gas regulation section into operation again. If the installation of the choke washer (pos. 9) has given the desired result, the outlet pressure no longer varies, and the regulator reacts as desired, continue with item 4. If it has given the desired result, continue with item 3.

   The restriction must not make the regulator so sluggish that the SSV drops when starting or switching off the gas regulation section.

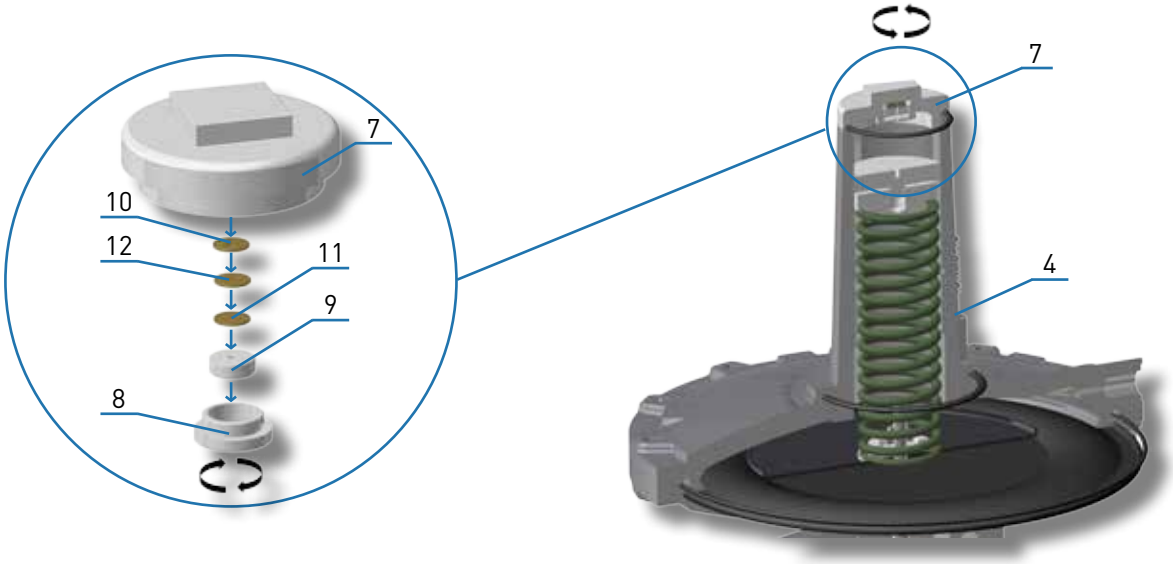

3. Installation of the choke washer in the impulse line
   The regulator flow can be restricted by installing a choke washer (pos.10, 11 or 12) in the impulse line.
   To do so, the ball valve upstream of the gas pressure regulator must be closed, and the gas regulation section must be depressurized by discharging the gas to the atmosphere as prescribed (see operating manual). The choke washer (pos. 10) is then installed in the impulse line between the Ermeto screw fitting (pos. 6) and the impulse line and screwed down again. The gas regulation section is then put into operation as specified (see operating manual).

If the outlet pressure remains stable during operation and the regulator reacts as desired, continue with item 4.

If the outlet pressure still varies, the installation process of the choke washer (pos. 11) can be repeated.
If this still doesn't give the desired result, the installation process can be repeated with the choke washer (pos. 12).
If the outlet pressure remains stable during operation and the regulator reacts as desired, continue with item 4.

If this procedure is not successful, contact MEDENUS to find out other solution options.
The restriction must not make the regulator so sluggish that the SSV drops when starting or switching off the gas regulation section.

4. Put the choke washers that are not required back into sealing cap (pos. 7) and screw down the locking screw (pos. 8). Seal the spring cap (pos. 4) of the regulator as prescribed using the sealing cap (pos. 7). After completion of all of the work, a leakage test must be performed on the gas regulation section.

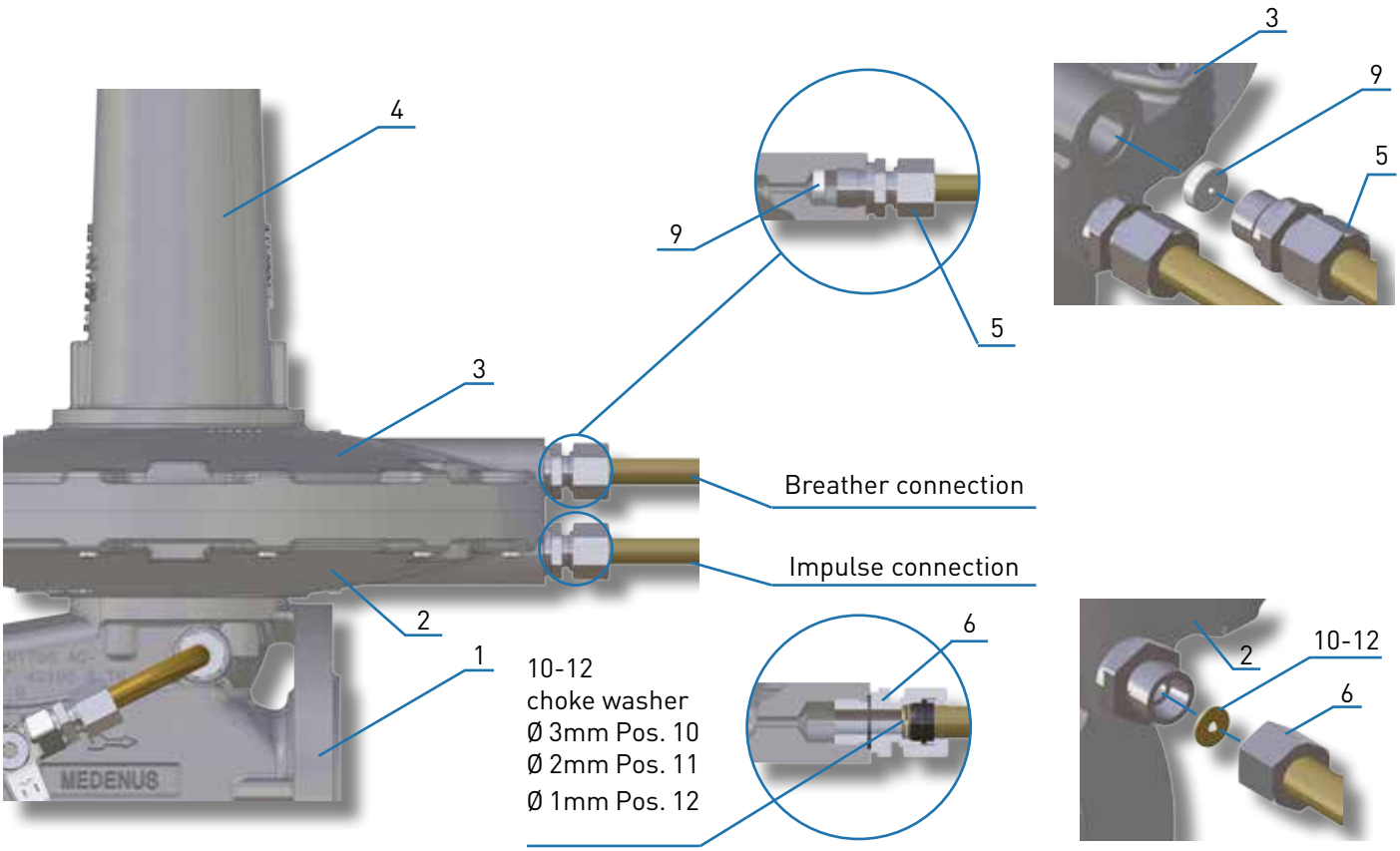

Legend

1. Enclosure
2. Diaphragm cover bottom
3. Diaphragm cover top
4. Spring cap
5. Ermeto screw fitting breather connection
6. Ermeto screw fitting pulse connection
7. Sealing cap
8. Locking screw
9. Choke washer
10. Choke washer Ø 3mm
11. Choke washer Ø 2mm
12. Choke washer Ø 1mm

12.8. SSV remote release

12.8.1 Use

- On SAV control devices

12.8.2 Application / Function

The direct-acting solenoid valve is used as electromagnetic remote release for closing the safety shut-off valve. Only for SSV control devices of functional class A.

Upon being energized or in case of power failure, the valve closes the impulse line, resulting in the pressure falling below the response pressure to be monitored. As a result, the SSV actuator shuts off the gas flow gas-tight.

After being released, the safety shut-off valve can only be opened by hand and engaged in the open position.

12.8.3 Technical Data

• Housing material	Brass or stainless steel, polyamide (Flange)
• Sealing material	FKM (EPDM upon request)
• Media	Neutral gases and liquids (e.g. compressed air, city gas, grid gas, water, hydraulic oil, petrol). Suitable for technical grade vacuum.
• Media temperature	-10° to +100 °C (PA coil) up to 120 °C epoxy
• Polyamid coil (FKM seal)	Coil
• Ambient temperature	max. +55 °C
• Viscosity	max. 21 mm^2/s
• Line connection	G 1/8, G 1/4, flange (SFB)
• Operating voltage	24 V DC, 24 V/50 Hz, 230 V/50 Hz
•	(other voltages upon request)
• Voltage tolerance	±10%
• Nominal operating mode / Single valve	Permanent operation 100%
• Electrical connection	DIN EN 175301-803 Form A for device socket
•	Type 2508 (see ordering table accessories)
•	ATEX/IECEx version potted with 3 m cable
• Installation position	Any, preferably drive pointing upwards
• Degree of protection	IP65 with device socket, ATEX/IECEx terminal connection version
•	and cable connection version
•	NEMA 4x with device socket 2508 or 2509
•	for VA versions (other versions upon request)
• Thermal insulation class coil	Polyamide class B (epoxy class H upon request)
• Coil material polyamide	(epoxy upon request)
• Nominal width	DN 1.5 - 2.5

Further technical data and information on the 3/2-way valve, such as information on ATEX, are available for download on the manufacturer's homepage.

Note

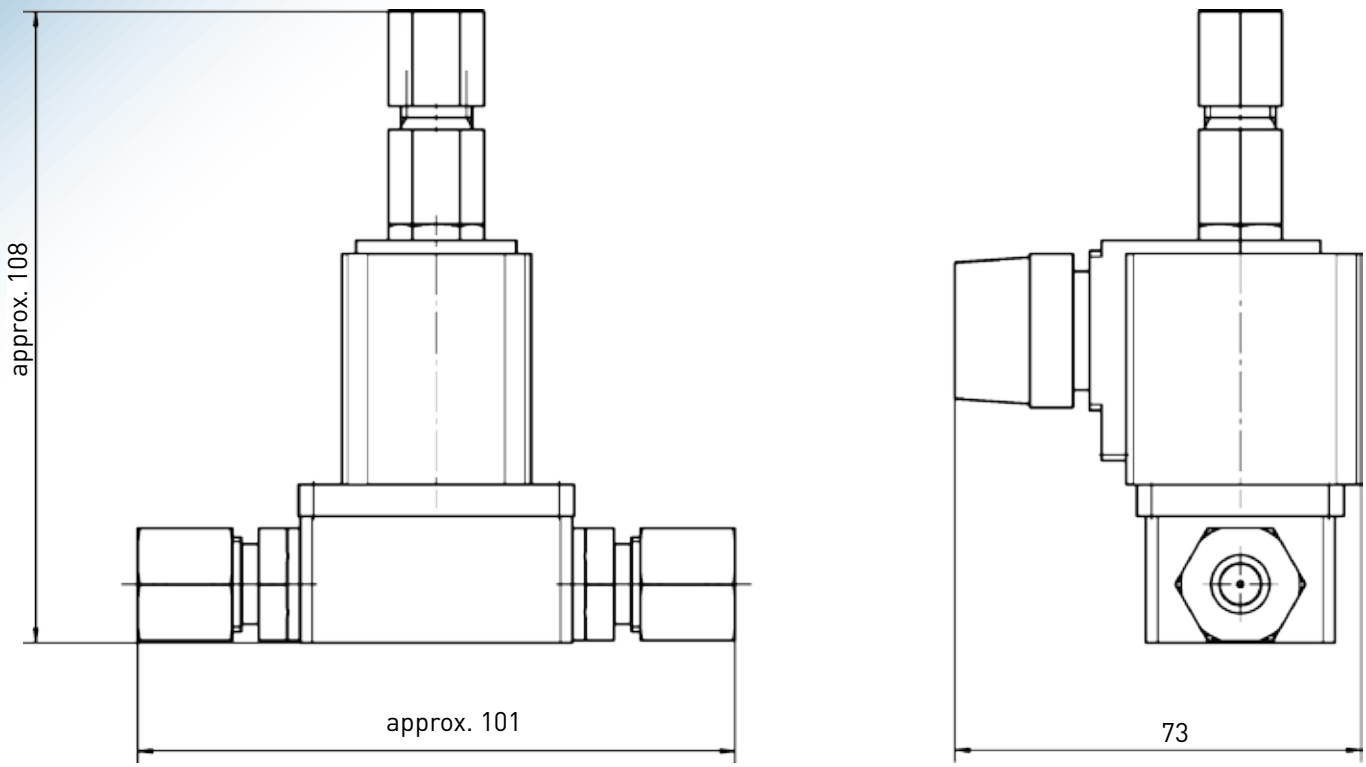

12.8.4 Application example

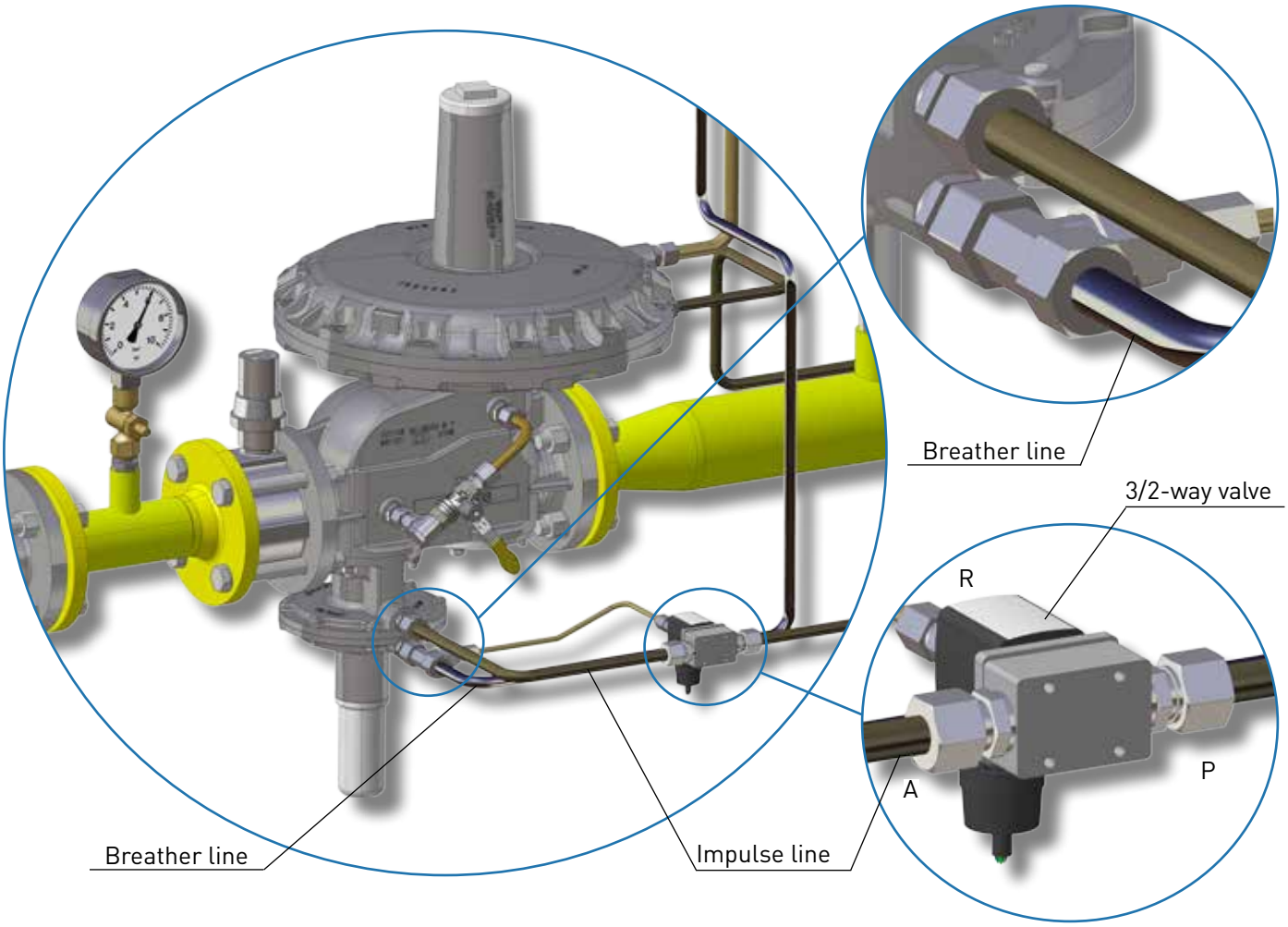

12.9. SM safety diaphragm

12.9.1 Use

- Gas pressure regulators RS 250 / RS 251
- Gas pressure regulators RS 254 / RS 255
- Gas pressure regulators R 100 / R 100-U
- Gas pressure regulators R 101

12.9.2 Application / Function

In the model with safety diaphragm, the safety diaphragm is located above the main diaphragm. When the main diaphragm ruptures, the safety diaphragm makes contact with the top cover of the diaphragm assembly and prevents any inadmissible escape of gas into the surrounding atmosphere.

12.9.3 Application example

Example: Gas pressure regulator RS254 with safety diaphragm

1. Ball valve
2. Cellular gas filter with differential pressure gauge
3. Adapter
4. Pushbutton valve
5. P1 pressure gauge
6. MQMe quantometer with electronic counter
7. Safety shut-off valve*
8. BV breather valve
9. SSV impulse line
10. Bypass valve*
11. Calming section
12. Gas pressure regulator with safety diaphragm
13. Regulator impulse line
14. Omit breather line
15. SSV test valve
16. SL 10 safety relief valve (SRV)
17. SL 10 relief line
18. BV breather valve
19. Vent cock
20. P2 pressure gauge
21. Compensator

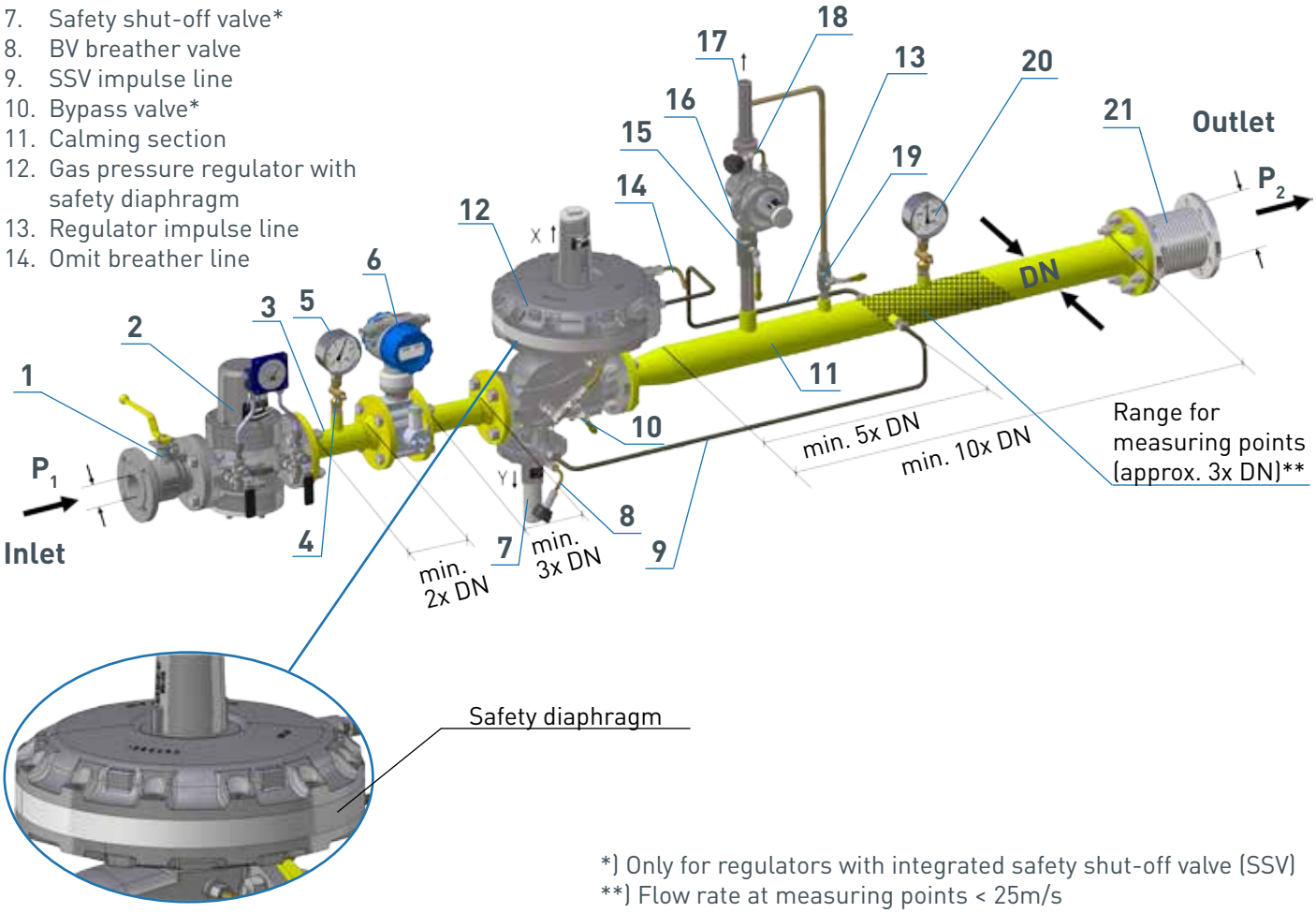

*) Only for regulators with integrated safety shut-off valve (SSV)
**) Flow rate at measuring points < 25m/s

13 tools

13.1 Brace and bit with 4-jaw chuck

The 3.5 - 16 mm brace and bit with 4-jaw chuck and the accessories available for it are used for precise adjustment of the setpoint spring in your MEDENUS gas pressure regulator.

For further information for use and on the spring data of the setpoint springs, please refer to pages 12 - 13 "Initial commissioning / Recommissioning" and pages 14 - 15 "Regulator device setpoint spring table".

13.1.1 Accessories for brace and bit with 4-jaw chuck

Gedore screwdriver bit 1/2" slotted 18x2.5 mm

- Hexagon square drive to DIN 3120 - C 12.5, ISO 1174, with ball groove
- Hand-operated, with slip-proof cross knurling
- Chrome-plated
- With pressed-in pin made of GEDORE vanadium special steel, manganese-phosphatized
- Cutting blade to DIN ISO 2380-1 form B

Gedore extension 1/2" 76 mm

- Model to DIN 3123, ISO 3316
- For hand-operated socket wrench inserts with square drive to DIN 3120, ISO 1174, with ball detent
- GEDORE vanadium steel 31CrV3, chrome-plated

Gedore extension 1/2" 76 mm

- Model to DIN 3123, ISO 3316
- For hand-operated socket wrench inserts with square drive to DIN 3120, ISO 1174, with ball detent

- GEDORE vanadium steel 31CrV3, chrome-plated

13.2 SSV tightening tool

The tightening tool made of stainless steel is used for replacing the SSV diaphragm in your MEDENUS safety shut-off valve.

- Width across flats 22
- Stainless steel 42CrMo4

Declaration of Conformity
(Summary)

Manufacturer: Medenus Gas-Druckregeltechnik GmbH
Address: Im Langen Feld 3
D-57462 Olpe

declares under sole responsibility that the products:
R 254 / RS 254 / RP 254 / RSP 254
R 255 / RS 255 / RP 255 / RSP 255

Gas Pressure regulator (spring-loaded proportional regulator), optionally with safety shut-off valve (SSV) for upper and lower shut-off pressure, and / or with pilot support, have been subjected to an EC-type examination and conform to the basic requirements of the directives
GAR (EU) 2016/426 EC-Gas Appliances Regulation and 2014/68/EU A III B EC-Pressure Equipment Directive in the respective current version.

Marking (PIN) according to Pressure Equipment Directive and Gas Appliances Regulation

CE-0085AQ0882 model R 254 / RS 254 / RP 254 / RSP 254
CE-0085AQ0883 model R 255 / RS 255 / RP 255 / RSP 255

Notified body (EU type examination: Module B)
DVGW CERT GmbH
Josef Wirmer Straße 1-3
D-53123 Bonn, Germany
Notified Body number: 0085

The basis of the EC type examination are the harmonized European standards and / or national standards, as well as the European directives and / or regulations:

2014/68/EU A III B EC Pressure Equipment Directive	(15.04.2014)
GAR (EU) 2016/426 A III B EC Gas Appliances Regulation	(09.03.2016)
DIN EN 334	(01.11.2019)
DIN EN 14382	(01.11.2019)

Monitoring of the EC quality assurance system (module D)
DVGW CERT GmbH
Notified Body number: 0085

Registration No. Pressure Equipment Directive **SD-0085BQ0510**
Registration No. Gas Appliances Regulation **SE-0085BQ0510**

Olpe,
01.10.2020

Alexander Christiani
Managing Director

Notes

In the download area of our homepage, this document is available in different languages. You can use the following QR codes and links to go directly to the corresponding documents.

Deutsch:

http://medenus.de/files/upload/downloads/RS254/BWA_RS254_255_de.pdf

Englisch:

http://medenus.de/files/upload/downloads/RS254/BWA_RS254_255_en.pdf

MEDENUS Gas-Druckregeltechnik GmbH
Fon +49 (0)2761 82788-0
Fax +49 (0)2761 82788-9
Im Langen Feld 3 / D-57462 Olpe
info@medenus.de
www.medenus.de

EN